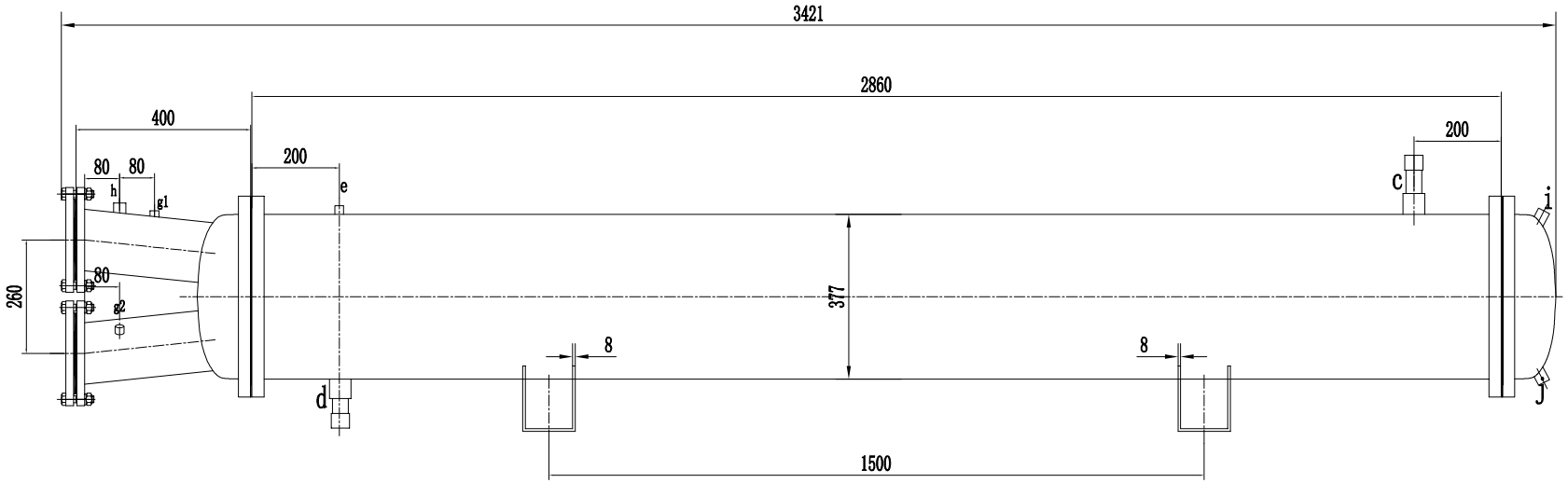


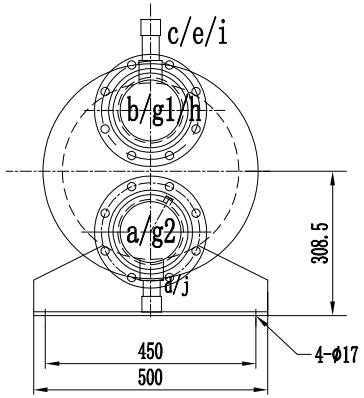


| | | | | | | | | | |
|---|---|---|---|---|---|---|---|---|---|
| Technical characteristics table | Design pressure(MPa) | Shell Pass | 2.4 | Tube Pass | 1.0 | Tube surface | a DN125 flange | Use | Water inlet |
| | Design temperature(℃) | | 60 | | 60 | | b DN125 flange | | Water outlet |
| | Medium | | R134A | | H20 | | c Φ3-5/8(ID) | | R134A entrance (Expand the inner mouth) |
| | Heat Exchange Area($M^2$) | 84 | | | | | d Φ1-5/8(ID) | | R134A exit (Expand the inner mouth) |
| | Main weld coefficient | 1.0 | | | | | e NPT3/8 | | Vent port |
| | Corrosion margin | 1.0 | | | | | g1/2 $G\frac{1}{2}''$ Internal thread | | Temperature measuring port |
| | Vessel Type | | | | | | h G1″ Internal thread | | Flowmeter interface |
| | weight | | | | | | i $G\frac{1}{2}''$ Internal thread | | Vent port |
| | | | | | | | j $G\frac{1}{2}''$ Internal thread | | Drainage outlet |

| | | | | | |
|---|---|---|---|---|---|
| Design | | | shell and tube condenser | | |
| Check | | | | | Assembly drawings |
| | | | | | |
| | | | | | QXC150S14 |