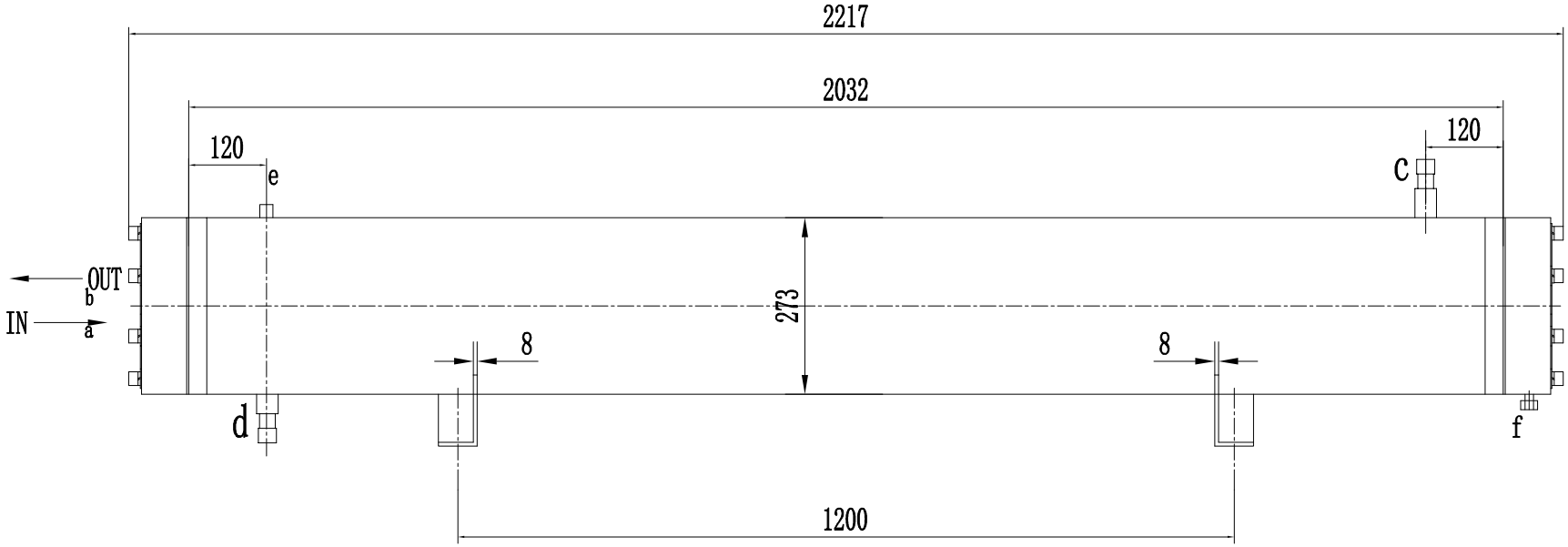

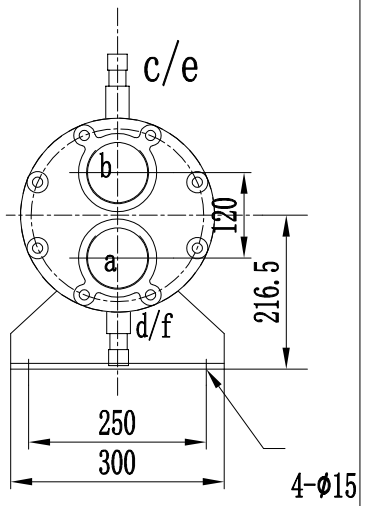

Technical characteristics table	Design pressure(MPa)	Shell Pass	2.4	Tube Pass	1.0	Tube surface	a G3″ Internal thread	Use	Water inlet
	Design temperature(℃)		60		60		b G3″ Internal thread		Water outlet
	Medium		R134A		H20		c Φ2-1/8(ID)		R134A entrance (Expand the inner mouth)
	Heat Exchange Area(M^2)	30					d Φ1-1/8(ID)		R134A exit (Expand the inner mouth)
	Main weld coefficient	1.0					e NPT3/8		Vent port
	Corrosion margin	1.0					f RC1/4		Drainage outlet
	Vessel Type								
	weight								

Design			shell and tube condenser		Assembly drawings
Check					
					QXC50S10