CONTENT

1. General 3
1.1 Product Introduction 3
1.2 Nomenclature 3
1.3 Product range 4
1.4 Design Specification 4
1.5 Operation range 5
1.6 Design Features 6
2. Application 7
2.1 Compressor application 7
2.2 Lubricant Application 9
2.3 System application 11
2.4 Motor control 21
2.5 Installation and fixation 24
3. Accessory 26
3.1 Accessory list 26
3.2 Oil circuit parts 27
3.3 System parts 29
3.4 Electrical parts 31
4. Maintenance 38
4.1 Items to be checked before machine starting 38
4.2 Items to be checked during operation 38
4.3 Faults analysis 40
5. Appearance and functions 42
5.1 Appearance structure 42
5.2 LBII-100~410-PLUS Connector 45
5.3 LBII-100~280-PLUS Dimension 46
5.4 LBII-100~280P-PLUS Dimension 47
5.5 LBII-360/410-PLUS Dimension 48

5.6 LBII-100~280-PLUS Dimension 49

5.7 LBII-100~280-P-PLUS Dimension 50

5.8 LBII-360/410-PLUS Dimension 51

1. General

1.1 Product Introduction

In recent years, Hanbell has launched LB, LB-PLUS series low temperature screw refrigeration compressor based on the integrated application experience in low temperature field and customer demand. In order to further expand the application field and reliability of products, LBII-PLUS series compressors are specially developed. LBII-PLUS series compressors continue to use the automatic control function of LB-PLUS. On the premise of ensuring intelligent application, LBII-PLUS series further optimize the motor cooling control logic and cooling structure, improve the safety margin of LBII-PLUS, and further expand the operation range, so that LBII-PLUS can meet the application requirements of air-cooled system. At the same time, it further improves the performance, so that LBII-PLUS can be widely used in refrigeration, industrial process cooling, freeze-drying and other fields with sufficient competitiveness. In general, LBII-PLUS is a new elite product of Hanbell in the of low temperature application field.

Compared with normal product, LBII-PLUS has different application modes; users must read the contents of this manual carefully before using, installing, debugging and running. If you have any questions, please contact Hanbell.

1.2 Nomenclature

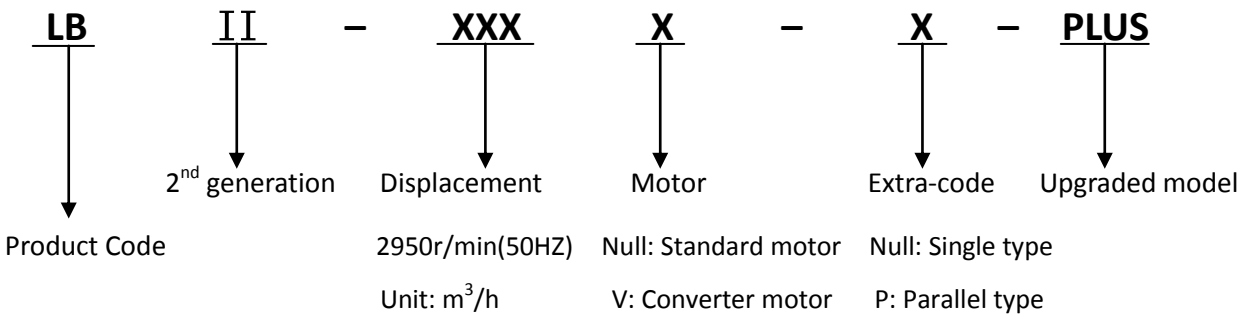

- Rated power: 380V/50Hz, if need other special voltage/frequency, please contact HANBELL.
- The standard motor of LB-PLUS is PWS partial winding starting motor.
- Single type——compressor with built-in oil separator, hereinafter referred to as "single type".
- Parallel type——compressor without built-in oil separator, hereinafter referred to as "parallel type".
- If the compressor belongs to single type, the extra-code is omitted.
- When the compressor is applied for R22 refrigerant, the refrigerant code is omitted

1.3 Product range

LBⅡ-PLUS fixed frequency compressor

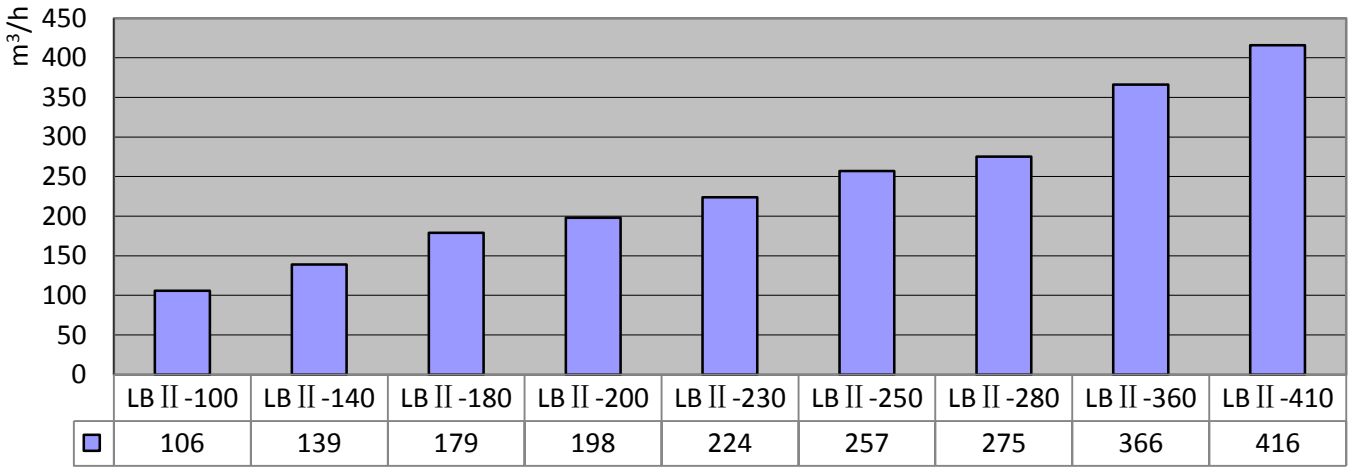

1.4 Design Specification

Table 1 Compressor Design Specification

Model	Compressor			Motor					Oil filling volume	Oil heater	Strength test	Weight
	Displacement 50Hz m³/h	Rotation 50Hz r/min	Lubricant	Type	Start-up	Voltage(V)50Hz	Insulation	Protection	L	W	bar	Kg
LBII-100/ LBII-100-P	106	2950	Oil difference pressure supply	3 phase 2 pole squirrel-cage inductor motor (frequency conversion motor optional)	Partial winding starting	380	Level F	PTC +NTC	4.5	300	35	248/233
LBII-140/ LBII-140-P	139								7			290/275
LBII-180/ LBII-180-P	179								7.5			310/295
LBII-200/ LBII-200-P	198								10			440/420
LBII-230/ LBII-230-P	224								10			460/440
LBII-250/ LBII-250-P	257								10.5			464/446
LBII-280/ LBII-280-P	275								11			474/454
LBII-360-P	366								-	-		370
LBII-410-P	416								-	-		416

Remark: "-P" Type compressor without lubricant oil

Note: Please confirm the rated current of designed working condition according to the HANBELL model selection program, and select the contactor, power line and fuse protection element according to the maximum operating current value determined by the initial temperature / limit operation.

1.5 Operation range

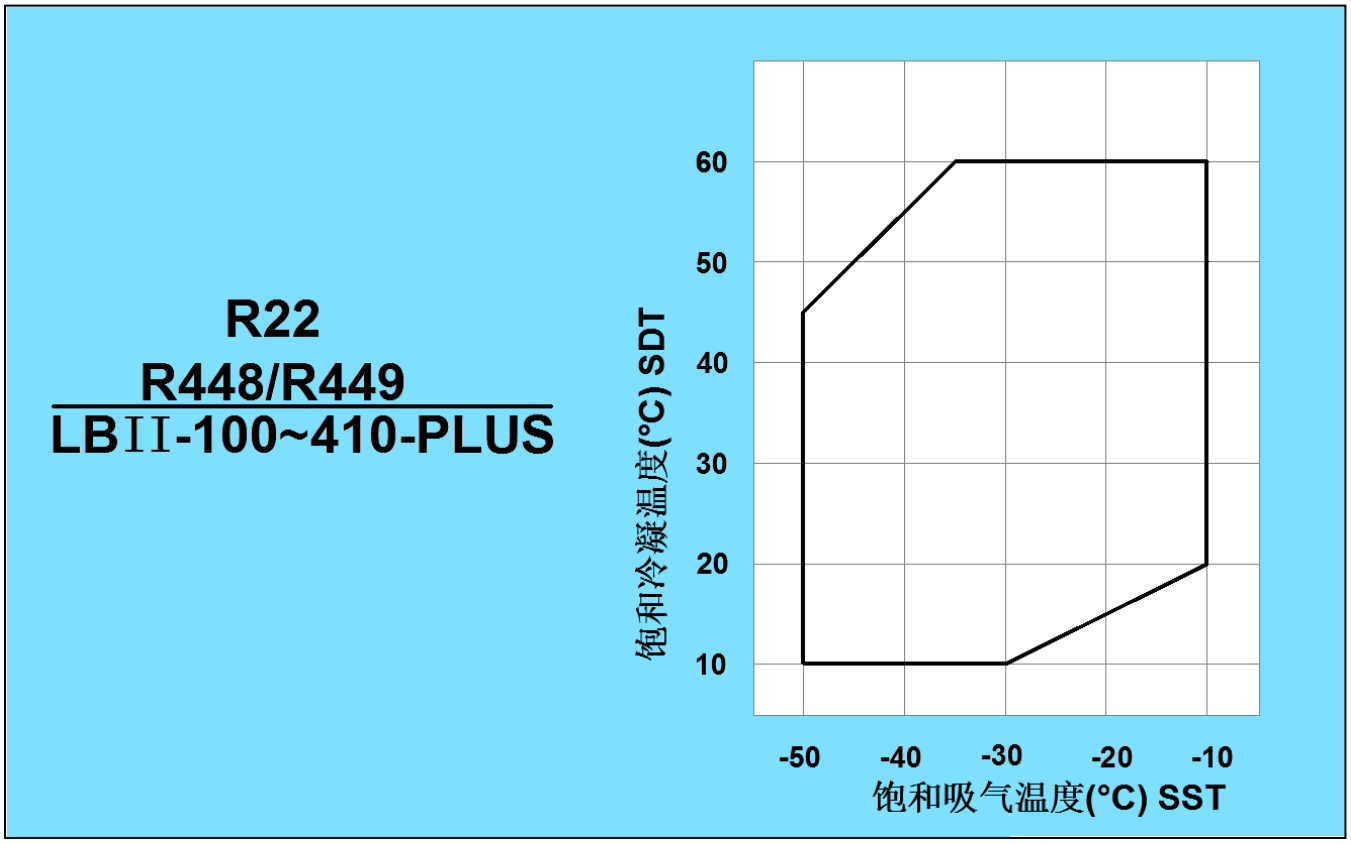

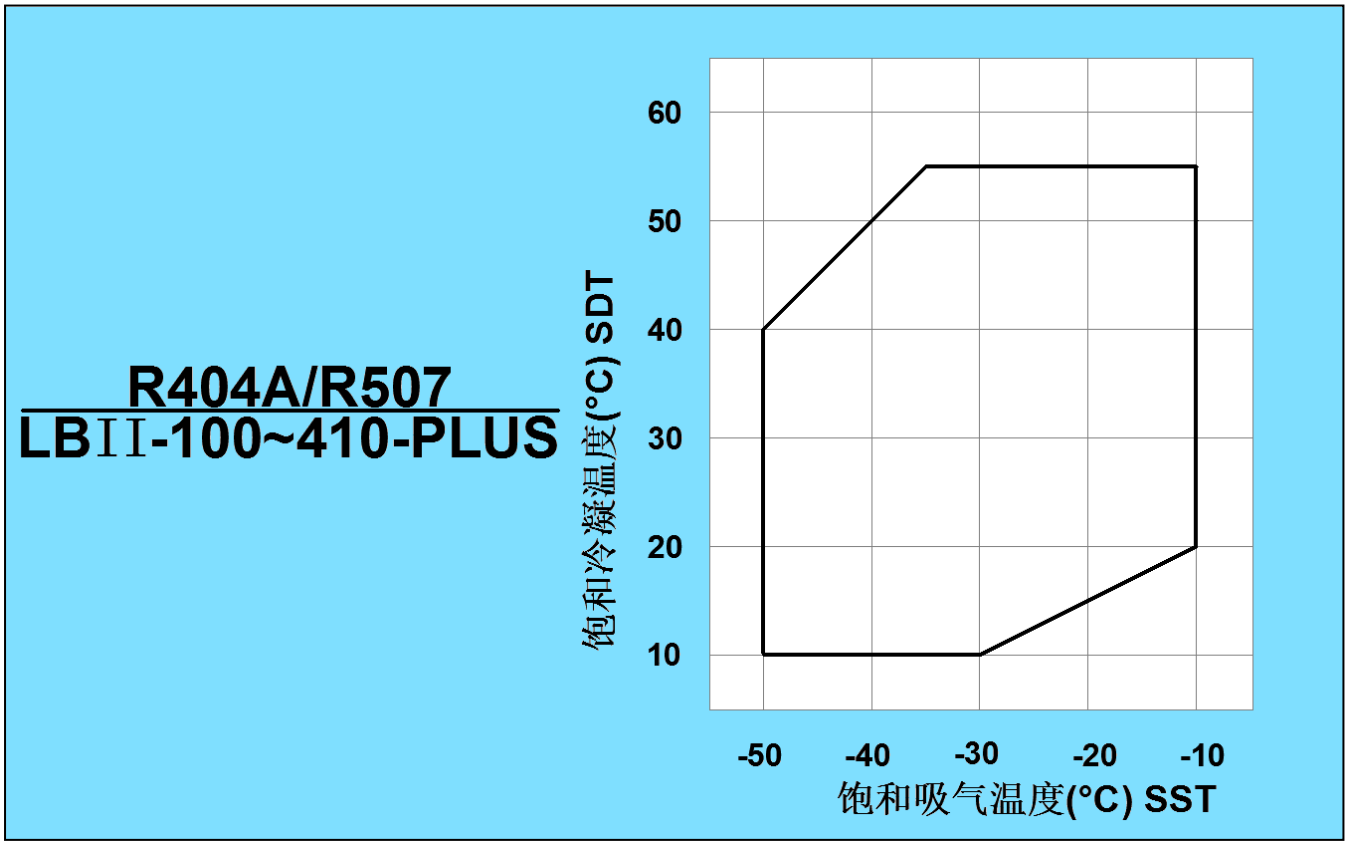

1.6 Design Features

- **Electronic expansion valve**

  The LBII-PLUS adopts electronic expansion valve. Its precise control, stability in operation and simplification control make compressors simpler, safer and more reliable.

- **Independent cooling of motor**

  It ensures that the motor runs at the ideal temperature, which effectively prolongs the life-time of the motor. The harmful superheating of the suction refrigerant will no longer been increased. The refrigerant after cooling the motor enters the compression chamber, so it will not cause the cooling loss due to the cooling of motor, which achieves a higher energy efficiency ratio, especially in the low temperature application.

- **Application design of single compressor and parallel connection**

  LBII-100~280-PLUS are divided into two structural forms: with oil separator and without oil separator. LBII-360~410-PLUS have only one structure without oil separator. It can be applied to various application fields, and different suction and discharge outlet directions can be selected.

- **The wiring part far away from the suction port to avoid affecting the electrical insulation**

  Compared with the normal low temperature screw compressor, the frosting phenomenon of the electrical part is reduced, which improves the safety.

- **High efficiency multistage oil separator**

  Patented segmented high efficiency oil separator design ensures the lowest oil loss rate during the compressor operation.

- **Optimization motor cooling**

  The motor cooling control logic of LBII is optimized and operation range is expanded to meet the requirements of air-cooling applications.

- **Optimization of economizer connector**

  The connector of economizer is optimized, and the performance of LBII-PLUS with economizer is improved compared with LB-PLUS.

2. Application

2.1 Compressor applicationMotor cooling

The normal screw refrigeration compressor cool the motor through suction. When it works at low temperature condition, the mass flow rate of refrigerant is very small. Refrigerant absorbs heat through the motor, resulting in a lot of harmful superheat, which increases the specific volume of the refrigerant and leads to theloss of refrigerating capacity.

The LBII-PLUS series compressor adopts independent motor cooling. The motor chamber and the compression chamber are isolated, and only small amount of liquid refrigerant is used to cool the motor, which enables the motor to work in the ideal temperature range. Meanwhile, it can prolong the life-time of motor. The gaseous refrigerant after cooling the motor enters the compression chamber to avoid the refrigerating loss caused by the motor cooling. The effect is particularly obvious at low temperature.

In order to effectively control the refrigerant quantity that enter into the motor chamber, HANBELL designed the scheme to control the motor liquid injection:

- **Electronic expansion valve specially designed for LBII-PLUS**

With electronic expansion valve to control the temperature of the motor is shown in the following Figure, the solenoid valve and the compressor start or stop at the same time. The electronic expansion valve is controlled by controller of LBII-PLUS. Through a special algorithm, the temperature of the motor is controlled at around 60℃.

The following are description of two types of injection points:

1)

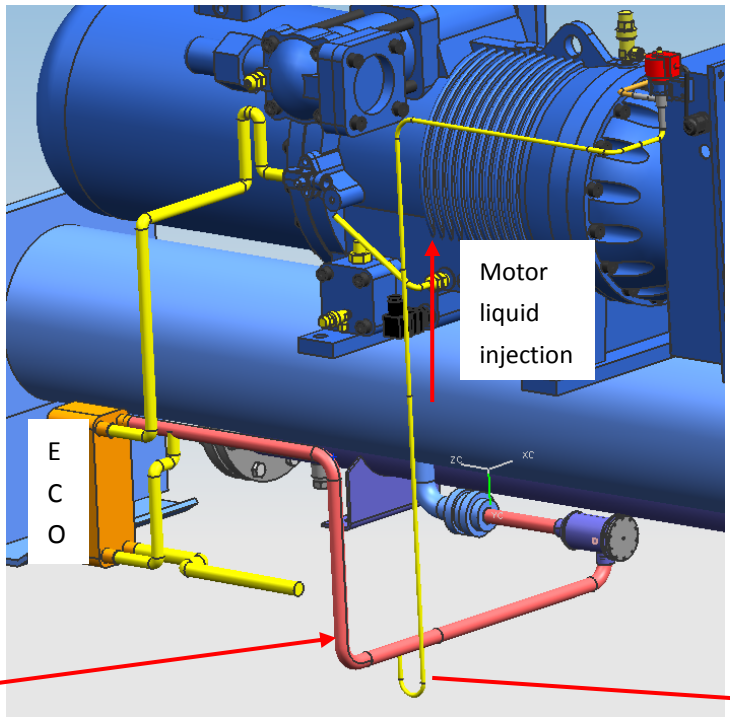

The main liquid pipe is required to use riser Piping after the motor takes the liquid point, so as to ensure that when the system is short of refrigerant, there is still enough liquid refrigerant to cool the motor.

The liquid taking point of the motor liquid injection shall be taken at the front and bottom of the rising riser of main liquid pipe

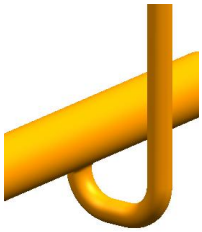

2)

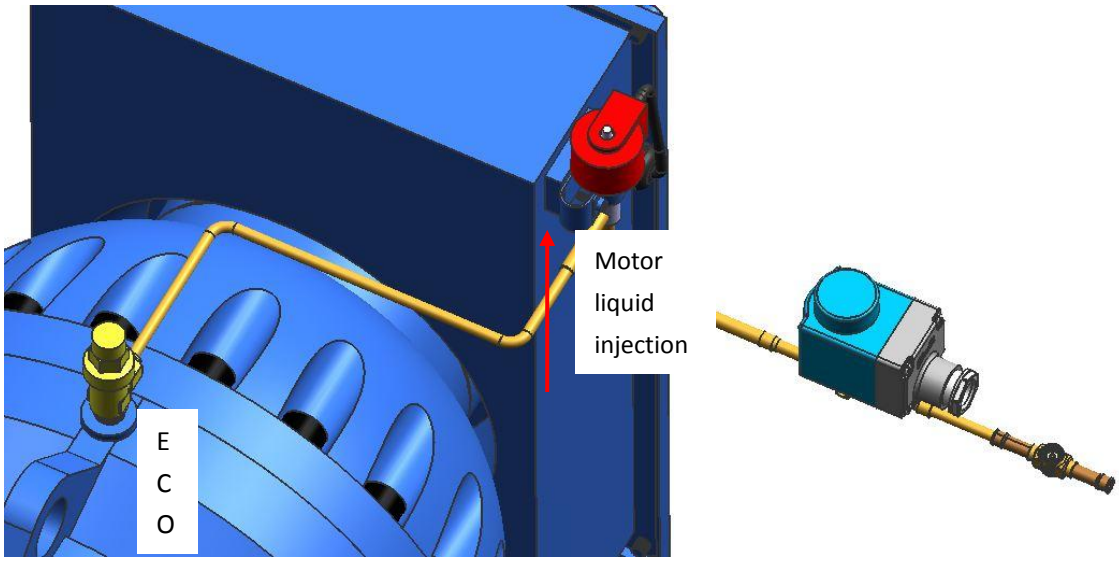

Figure2-1 Electronic expansion valve installation diagram

- It is forbidden to cut off the liquid injection of the motor during operation.
- It is forbidden to turn on the liquid injection of the motor when the compressor stops.
- The refrigerant extraction is introduced directly from the place after the dry filter of system, and the extraction point must be before the economizer. The material of injection pipe shall be copper and rubber pipe shall not be used.
- Normally closed solenoid valve shall be used for the motor liquid injection.
- The oil sight glass is used to confirm whether the refrigerant is full in pipe. It is strictly forbidden to run the compressor when the pipe is not full with refrigerant or there are a lot of bubbles in pipe.
- If there is insufficient refrigerant before start-up and commissioning, it is recommended to charge refrigerant from the valve above the casing.
- It is recommended that the high-pressure reservoir should be equipped with level switch to prevent the leakage of fluorine after long-term operation of the system, resulting in insufficient cooling liquid supply of motor and insufficient liquid supply of evaporator, resulting in overheating of motor and discharge, and eventually leading to compressor failure.
- It is recommended that the suction side and the motor side be insulated to avoid cooling loss.

Note: Compared with the compressor with normal suction cooling structure of motor, LBII-PLUS can improve the motor cooling reliability while improving the energy efficiency after motor liquid injection in the above way. Even if the system is short of fluorine, the low pressure is too low and the suction superheat is too high, the motor cooling can still be effectively ensured. In this way, the user can have enough time to deal with the abnormal warehouse temperature and fluorine deficiency in the system, while the compressor with normal motor cooling structure will alarm or even fail before the user finds out the problem and handles it.

2.1.2 Oil line blocking pin

If an external oil cooler is required to a single type compressor, oil blocking pin needs to be installed in the compressor. The function of the blocking pin is to block the oil internal cycle of the compressor, so as to realize the establishment of external oil.

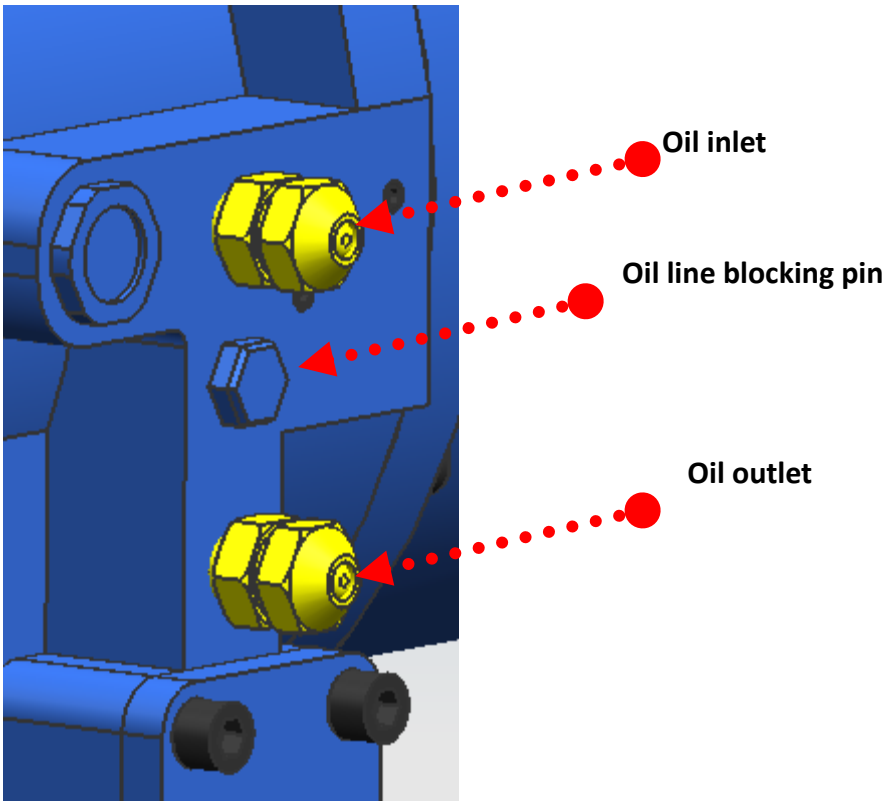

Figure2-1 Oil line blocking pin diagram

2.2Lubricant Application

2.2.1 Function of lubricant

- The sealing oil film is formed between the rotors and the compression chamber and between the male rotor and female rotor to reduce the leakage of the refrigerant gas from the high pressure side to the low pressure side during the compression process.
- The lubricant will absorb and take away the heat generated by the gas refrigerant during the compression process and the heat generated by the mechanical movements among the bearings, so as to ensure the long-term normal operation of the compressor and reduce the discharge temperature.
- To form the oil film among the bearings so as to ensure the operation of the bearing under normal conditions.

2.2.2 Specified lubricants for LBII-PLUS

Table-2 Lubricant specification

Refrigerant	R22	R404A/R507
Type	HBR-B03	HBR-B05
Proportion	1.01	0.957
Specific heat40 ℃（Kcal/kg K）	0.43	0.43

Note

- HANBELL only acknowledge the specified lubricant as written in above table.
- Minimum starting temperature of the lubricant: 20℃.
- When the compressor stops, please open the oil heater (exclude long term stop).
- Lubricating oil for other refrigerants can only be used after confirmation with Hanbell.

2.2.3 Requirements for use and replacement of lubricating oil

Before filling the lubricating oil, the system should be kept clean. After the initial operation of 2000 hours, it is recommended to refill the lubricant once more to ensure the long-term operation of the compressor.

- Lubricating oil is easy to absorb the moisture in the air, so it should be avoided to be exposed to the air.
- In order to keep as minimum as possible water contained in the system, it is suggested that the system needs to be heated and evacuated as long as possible when the lubricant is replaced.
- The foreign matter in lubricating oil will cause the blockage of the oil circuit. Therefore, the oil filter must be installed to the external oil circuit, and the pressure difference switch must be installed before and after the filter. When the pressure difference value reaches the set point (1.5bar), the oil filter must be replaced or cleaned.
- If the compressor runs under high temperature working condition for a long time, it will accelerate the deterioration of the lubricating oil. Please check the chemical performance of the lubricating oil regularly and shorten the interval of oil exchange.
- The acidification of lubricating oil will affect the life-time of motor. when the lubricating oil PH≤6, it should be replaced. (Please replace the system dry filter at the same time to ensure the system is dry).
- If the compressor motor is burned, it will produce acid harmful matter and debris, and they will be brought into the system together. The inspection should be carried out. Oil filters and lubricants must be changed many times until the cleanliness and acidity of the oil line reach the standard. The lubricating oil status needs to be traced regularly. Please replace it if the cleanliness and acidity beyond the standard range. Please pay attention to the cleanliness and dryness of the system as well.

Warning: If the lubricating oil that isn't authorized by Hanbell is used for compressor, HANBELL will not be responsible for the coming problems.

2.3 System application

LBII-PLUS system layout: Single type

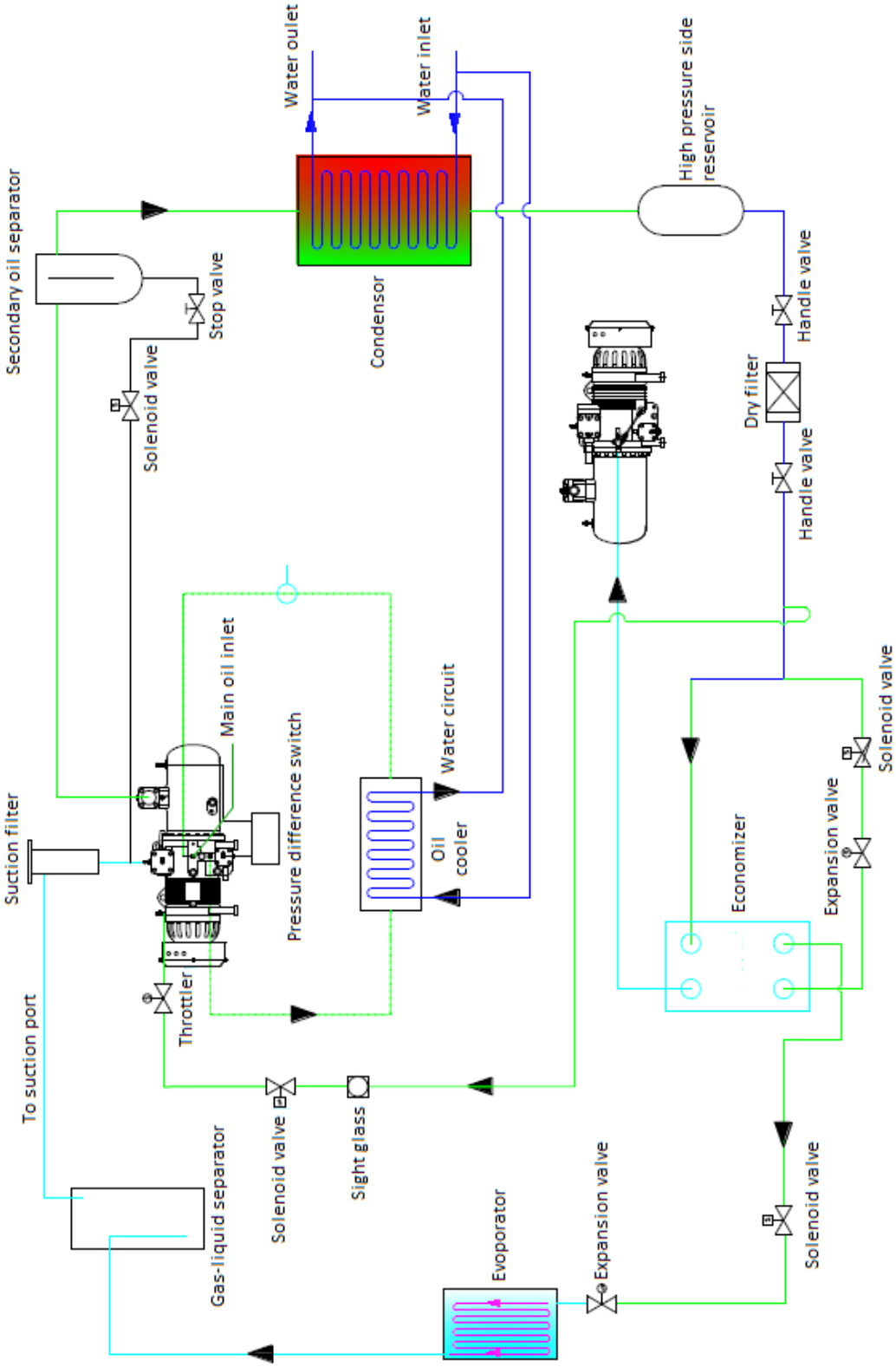

LBII-PLUS system layout: Parallel type

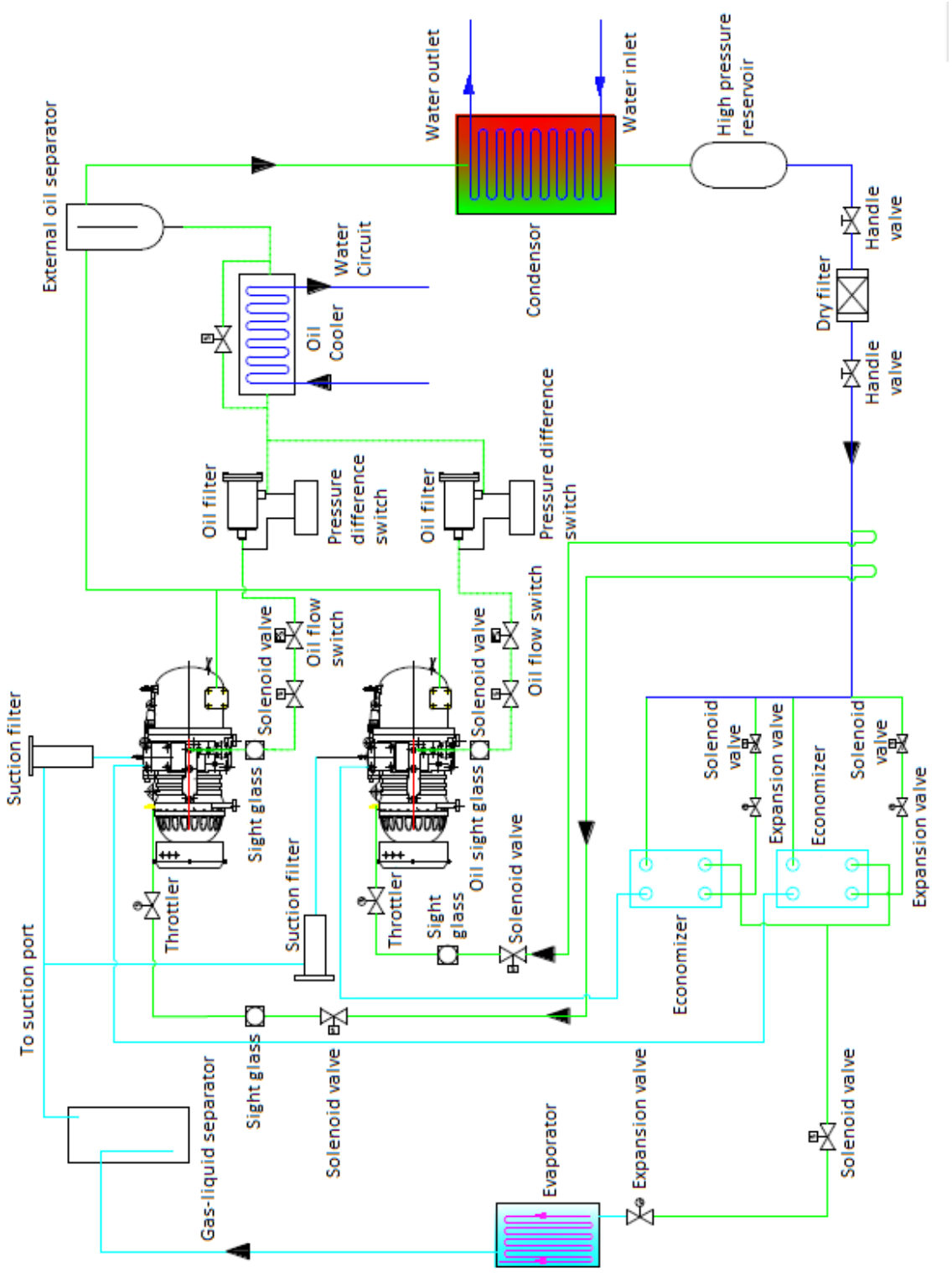

Figure-8 Basic system configuration

Note: The motor liquid injection pipe of each compressor in parallel should take liquid from the main circuit pipe independently to avoid the phenomenon of liquid grab.

2.3.1 Suction and discharge pipe configuration

During normal operation, the vibration of the compressor is small, so there is no need for flexible connection among suction and discharge pipelines, but the pipeline must have enough flexible length, and it needs to be ensured that the suction and discharge pipeline will not generate stress on the compressor. It is suggested to use copper pipes as suction and discharge pipes, because copper pipes can be used to reduce the vibration of the pipeline when the compressor is running.

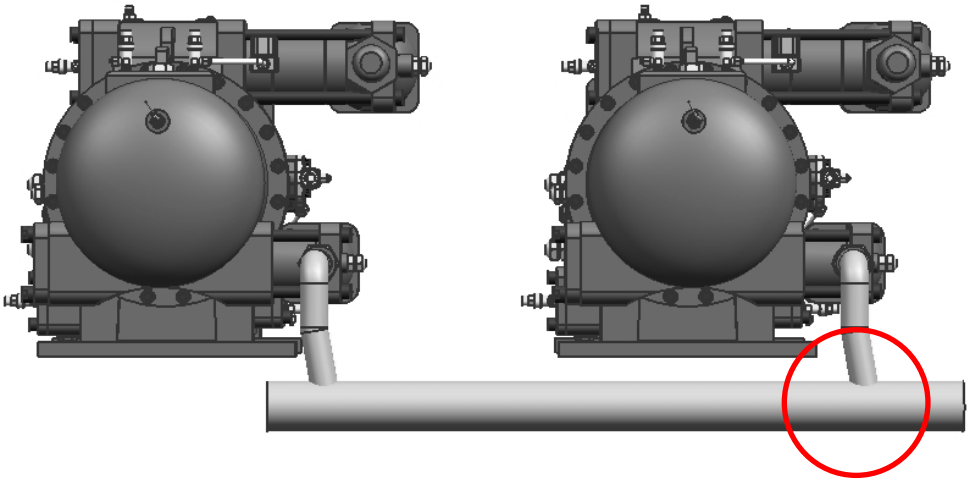

Discharge piping diagram-parallel system

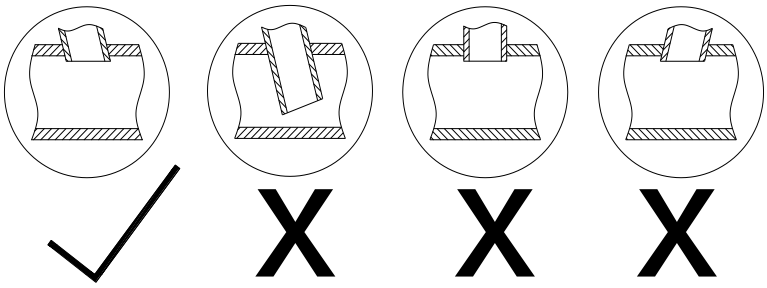

Detail 1

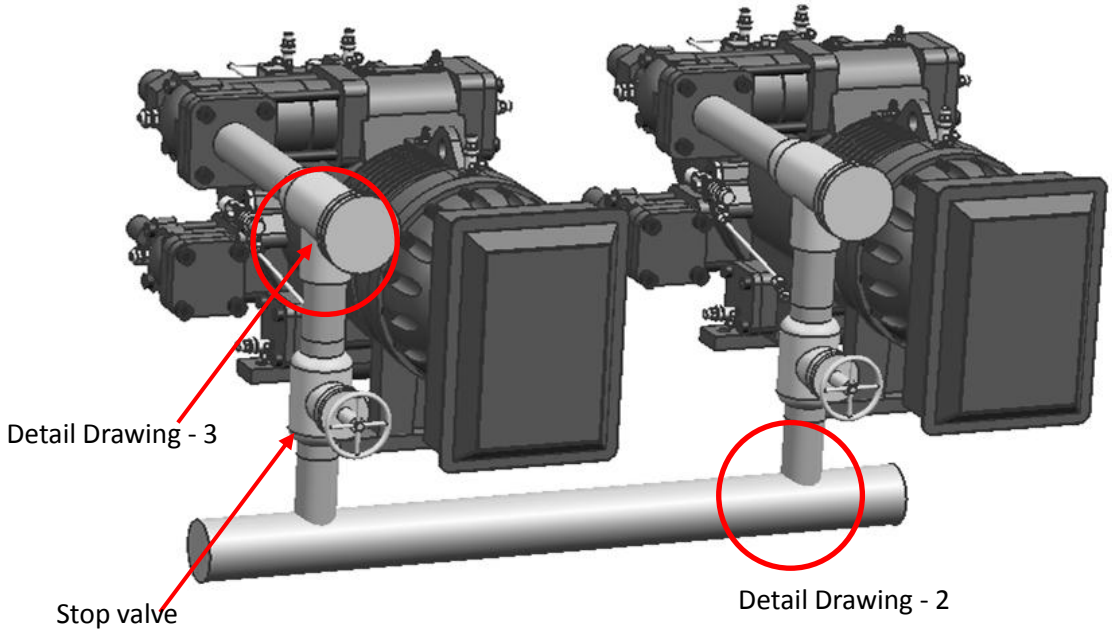

Suction piping diagram-parallel system

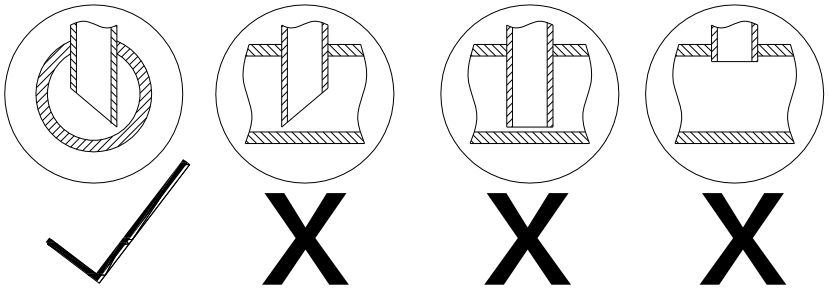

Detail 2

The compressor is equipped with a suction filter, it is still suggested to install a suction filter on the suction pipe and clean it regularly, so that it is convenient for cleaning and replacement, with double protection at the same time. When the system starts to operate, if the pressure drop is found greater than 0.5bar, please clean up filter. If the filter is found damaged, we need to replace it in time, and clean up the impurities in the pipeline. During installation, please ensure the correct direction of the filter. The stop valve is suggested to be added at the inlet and outlet for easy maintenance.

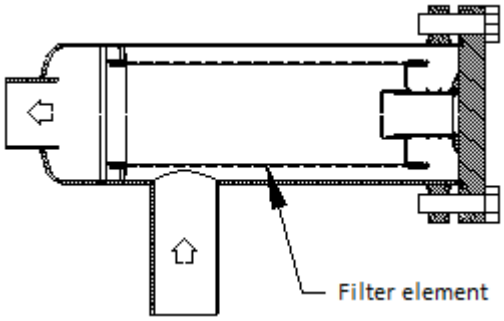

Detail 3

2.3.2 External oil circuit system

If the compressor operates under low temperature conditions and the lubricating oil does not have extra cooling, it will be unable to meet the operation requirements because of the high oil temperature. At this time, it is suggested to configure the external oil cooler which can reduce the discharge temperature, and can also prolong the life-time of the system.

Note: The temperature of the inlet oil should not be higher than 60˚C.

There are mainly 3 type of oil cooling system:

- Air cooling type
- Water cooling type
- Refrigerant cooling type

The heat exchange data of the oil cooler can be obtained by the HANBELL model selection program. The limit operating conditions should be taken into account, such as the maximum pressure difference (high condensation temperature and low evaporation temperature).

It is required that the pressure drop of the external oil circuit system should not be greater than 1bar, so as not to affect the normal lubrication of the compressor.

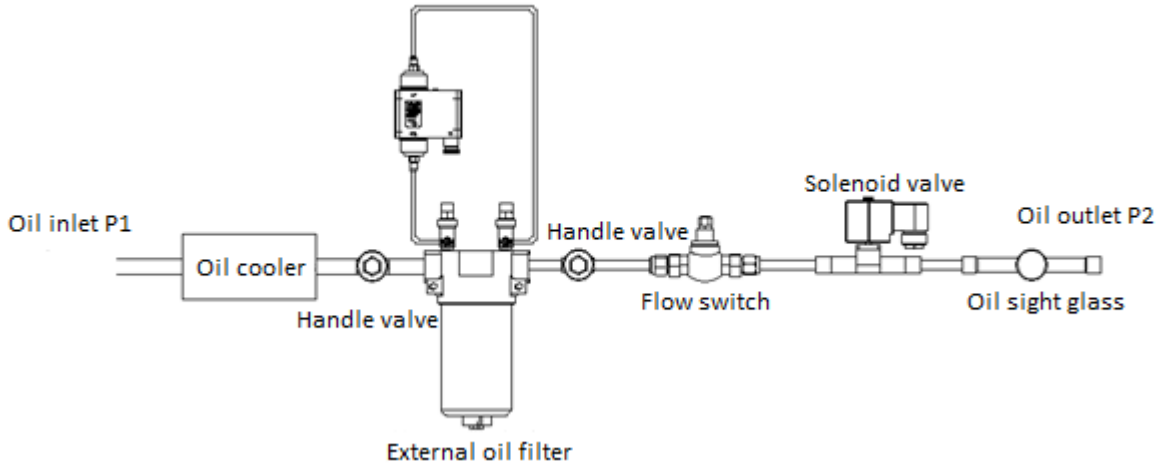

Figure-Pipeline diagram of external oil system

- **Air cooling type**

The fan accelerates the air flow passes the fin of oil cooler to cool the lubricating oil in the pipeline. The suggested system layout is shown in the following figure. For pressure difference switch, please refer to chapter 3.2.5.

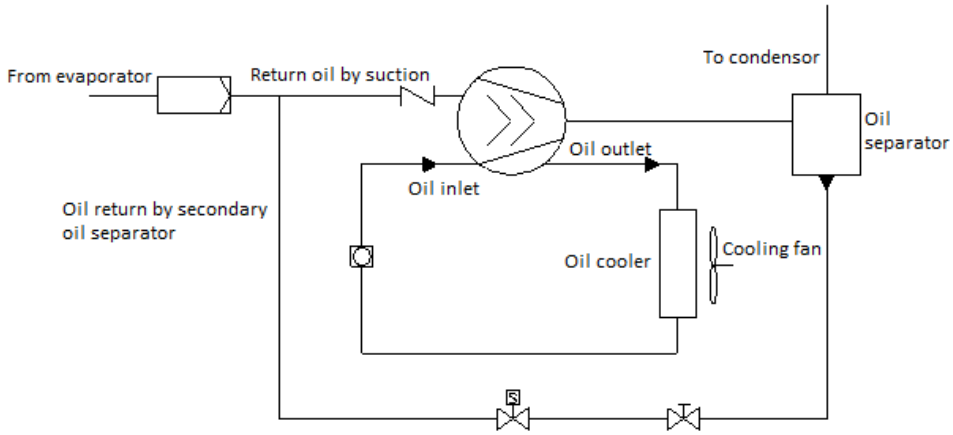

Figure - Air cooling type oil cooler for single system

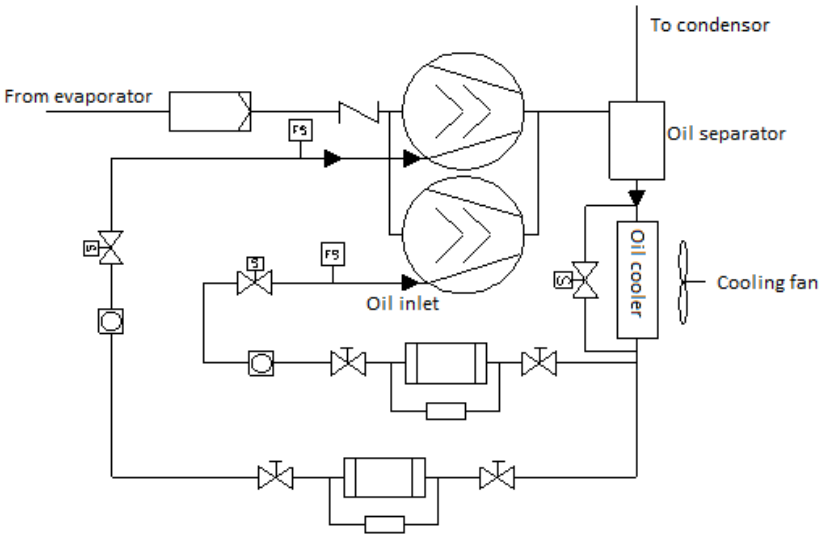

Figure - Air cooling type oil cooling for parallel connection system

Icon	Description	Icon	Description
	Suction filter		Oil cooler
	Compressor		Oil separator
	Check valve		Oil sight glass
	Oil filter	FS	Oil flow switch
	Pressure difference	S	Solenoid valve
	Handle valve		

Table 3 Illustration

- **Water cooling type**

The cooling water circulates by the pump and takes the heat of the lubricating oil. The suggested system layout is shown in following Figure. For the pressure difference switch of single system, please refer to Chapter 3.2.5.

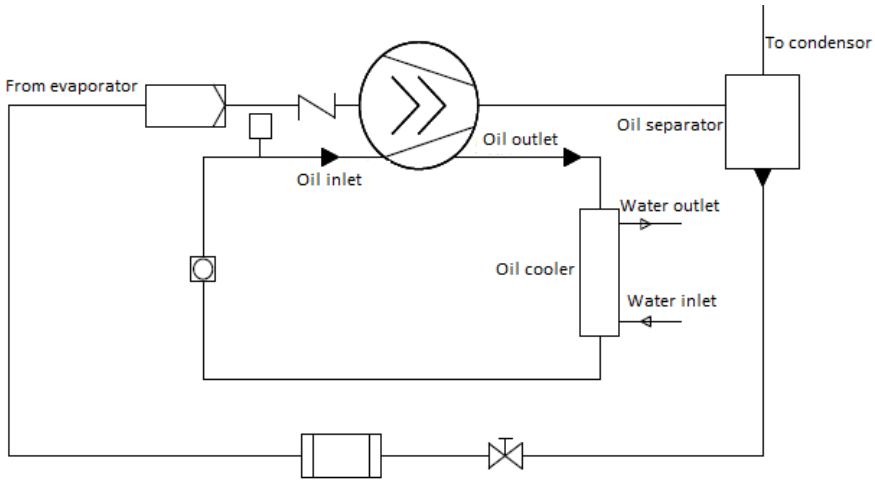

Figure - Water cooling type oil cooler for single system

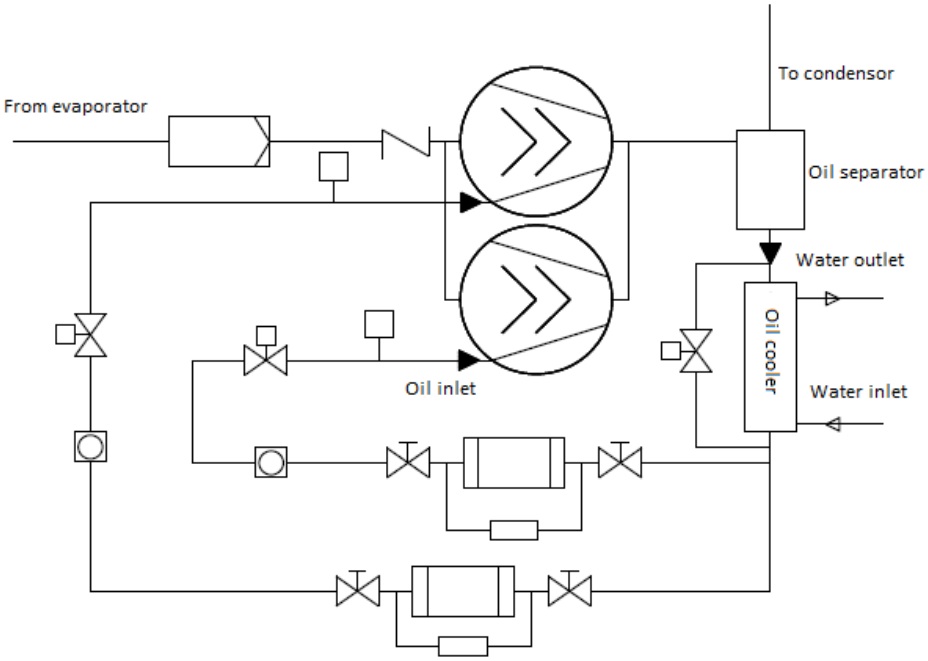

Figure - Water cooling type oil cooler for parallel connection system

2.3.3 Configuration requirements and use of external oil circuit

1) The oil cooler is suggested to be installed near the compressor. Moreover, the position of the oil cooler shall be lower than the oil level of the compressor and the oil separator, so as to prevent the lubricating oil from flowing back to the compressor or the oil separator when the compressor stops, resulting in high oil level in the oil separator and liquid compression during start-up that lead to the overflow of the compressor.
2) The returned oil temperature control device for oil cooler is necessary to ensure that the returned oil temperature is controlled at 40℃～60℃.
3) The oil cooler must be used for the following working conditions

   Low evaporation temperature (-20℃～-50℃)

   High suction superheat (＞15K)

Note: Regarding the load of the oil cooler, please refer to the data of HANBELL model selector. When selecting, we must consider the limit oil cooling load in the working condition and consider the size of the oil cooler.

◆ **Configuration suggestion:**

1) When the system is under normal operation, the pressure difference between high and low pressure side shall not be less than 4bar (if the oil pressure difference cannot be established for a long time, it is suggested to use pressure maintenance valve).
2) In order to ensure the oil temperature in the specified range, a bypass oil circuit with solenoid valve shall be connected between the inlet and outlet of the oil cooler. If the oil temperature is too low, open the solenoid valve so that the oil will be heated. Meanwhile, it can effectively regulate the oil cooler load under different conditions.
3) The oil solenoid valve is recommended to be installed near the oil inlet of the compressor to avoid the oil flowing to the compression chamber when the compressors stop.
4) It is suggested that the oil pipeline should not bend too much to cause excessive pressure drop and poor oil entry.

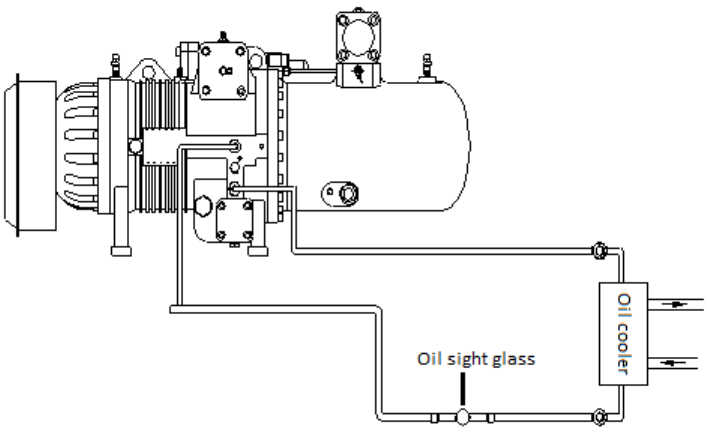

Figure LBII-100~280-PLUS Piping drawing of external oil cooling circuit

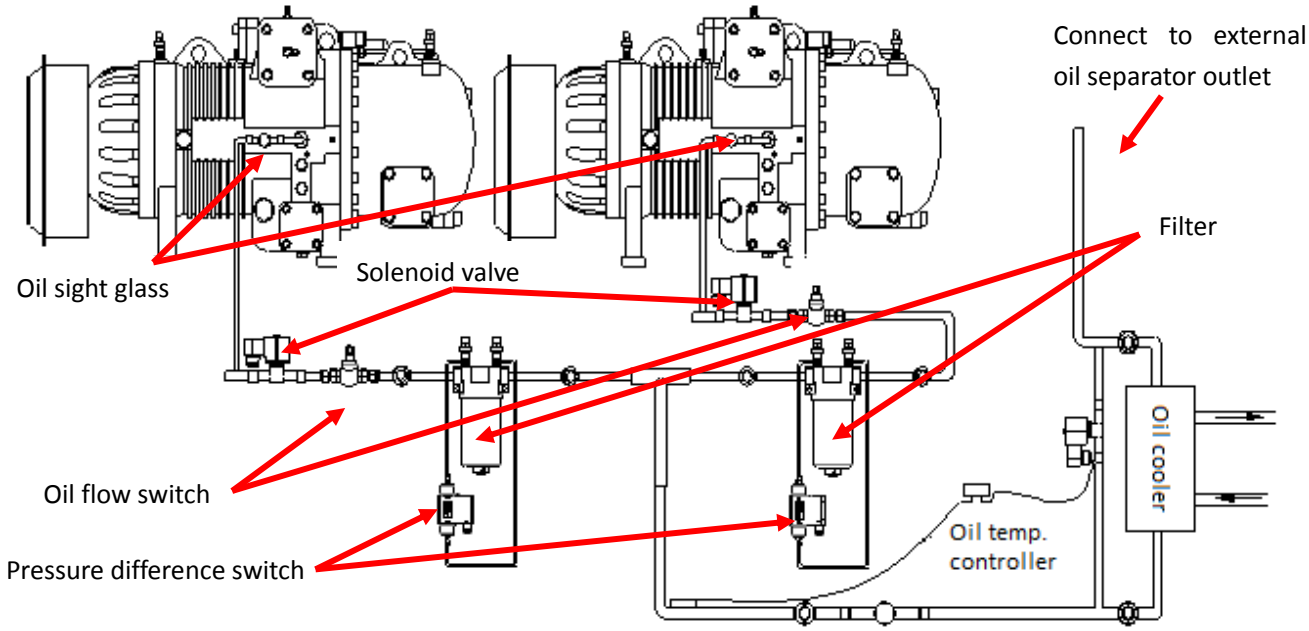

Figure LBII-100~280-PLUS-P Piping drawing of external oil cooling circuit

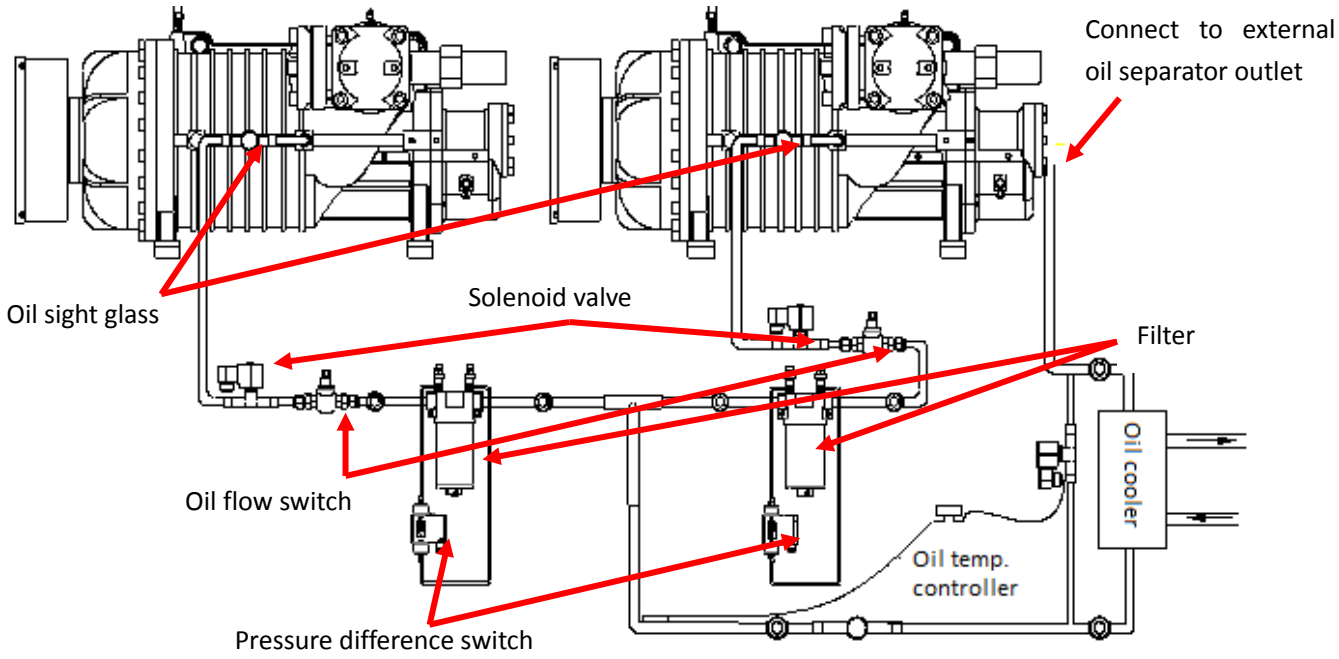

Figure LBII-360/410-PLUS-P Piping drawing of external oil cooling circuit

Model	Single type	Parallel connection type
LBII-100~180-PLUS	3/8"	Main oil circuit：5/8”, Branch oil circuit：3/8"
LBII-200~280-PLUS	5/8"	Main oil circuit：1-1/8”, Branch oil circuit：5/8"
LBII-360/410-PLUS	/	Main oil circuit：1-1/8”, Branch oil circuit：5/8"

Oil circuit pipe size table

2.3.4 Economizer

The economizer will further cool the refrigerant before it pass through the expansion valve of the system, which increases the cooling capacity and efficiency of the system, especially in the working condition of high condensation and low evaporation temperature.

Sub-cooling cycle economizer:

A heat exchanger is used as a liquid sub-cooling device to achieve the purpose of sub-cooling of liquid refrigerant. A portion of the refrigerant will be drawn from the condenser pipe, which will enter the sub-cooler through the expansion valve, absorbing the heat and evaporating, and exchange heat with the backflow liquid refrigerant. After heat absorption, the superheated saturated vapor enters the medium pressure compression section through the compressor's economic interface for compression. This type can effectively improve the quality of the liquid refrigerant refrigeration unit, and at the same time, the discharge temperature can be effectively reduced.

- **The selection of economizer:**

  The tube and shell type heat exchanger can be used as an economizer. Please select the load of the economizer according to the relevant technical data in the HANBELL software.

- **The selection of economizer expansion valve:**

  If you want to get more valve selection guidance for economizer expansion valves, please contact HANBELL.

- **The control model of economizer:**

  It is suggested that when the system starts to run stable, the high and low pressure ratio is greater than 3 or the low pressure side pressure reaches the set value, then the economic cycle can be opened in order to avoid the lubricating oil in the compressor back to the economizer, producing extra vibration and noise, even the crack of the pipe.

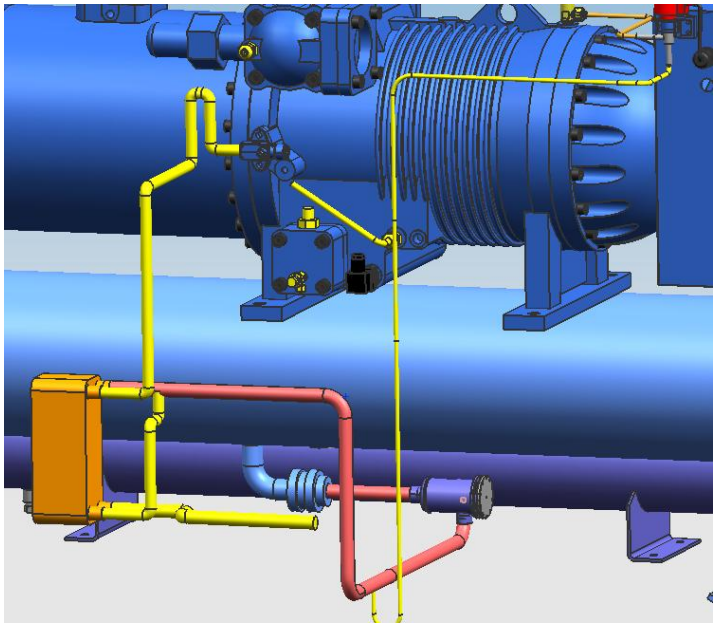

Figure - Economizer pipe diagram

- **Suggestions for economizer pipe line:**
  1. The economizer (sub-cooler) should be installed below the compressor to prevent the liquid refrigerant in the economizer flow back to the compressor during the shutdown.
  2. Under the unstable operating conditions or when closing the economizer circuit, a part of the oil and refrigerant will flow back to the pipeline of the economizer, so it is suggested to make a U-shape near the pipe line of the economizer to have an upstream pipeline, leaving a 150mm upstream line distance.
  3. Under low pressure ratio conditions, the airflow inside the compressor will flow back, which causes abnormal vibration and noise, so it is suggested to install buffer (silencer) and check valve near the inlet of the economizer.
  4. Please use corresponding pipes according to the size of the economizer connector.
  5. Besides the heat preservation requirements, we should pay attention to vibration of the pipelines.

2.3.5 Condensing pressure regulation

The compressor pressure difference valve between suction and discharge side shall achieve 4bar within 30 seconds after starting. If the pressure difference is too low, it will cause insufficient fuel supply, leading to the compressor shutdown in a period of time after starting (oil flow and pressure differential protection). At this time, it needs to do condensing pressure control, ensuring enough high and low pressure difference can be established within a short period of time to ensure compressor oil supply. It is suggested to use HANBELL optional pressure maintenance valve, and the pressure maintenance valve related information, please contact HANBELL. The following conditions can cause a low differential pressure:

- Too low ambient temperature, the condenser is installed outside and shutdown for a long time.
- Single compressor start in parallel system.
- Heat gas defrosting and reverse circulation.
- Double stage system low pressure compressor.

2.3.6 Parallel system operation requirements

- When the parallel system starts, the compressors will start one after another (two compressor is not allowed to start at the same time), and the time interval should be above 30s.
- When the compressors complete the start process and work stably, please observe if the lubricating oil in the external oil separator is clear or not, and ensure the position of the oil in the high level. The oil recovery temperature is controlled at 40~60℃.
- After the compressor is running for a period of time, if the pressure drop of the external oil filter is more than 1.5bar before and after the filter, the external oil filter core should be cleaned or replaced.
- In the parallel system the compressors can share one external oil separator. It is suggested that the oil filter and the oil flow switch can be configured separately for each compressor.

Attention:

- For parallel system, the liquid level switch should be installed on the external oil separator to avoid affecting the compressor oil return due to the low oil level.
- For parallel system, the external oil heater should be installed on the external oil separator. The oil heater on-off is controlled by the oil temperature sensor inside the oil separator.
- For parallel system, an oil filler and oil relief valve should be installed on the external oil separator to ease the replacement and supplement of lubricant.
- Cannot start the compressor, if temperature of the system lubricating oil is lower than 20℃or higher than 60℃.

For more information about the oil line, please contact HANBELL

2.4Motor control

2.4.1 Part winding start

Hanbell screw compressor is equipped with part winding start (PWS) motor.

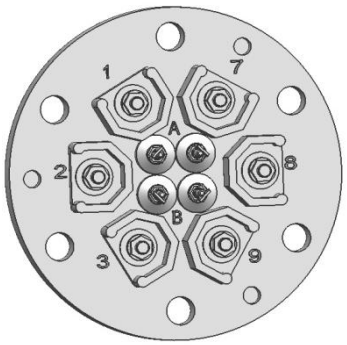

——A connect to PTC

——B connect to NTC

Figure- Compressor wiring

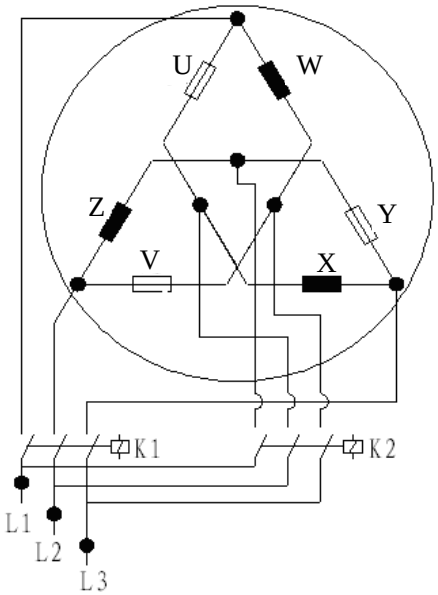

Figure Part winding start

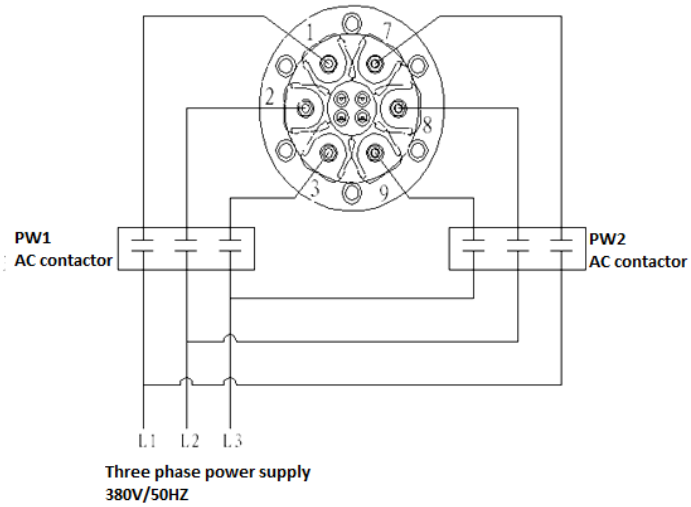

Figure Compressor motor wiring

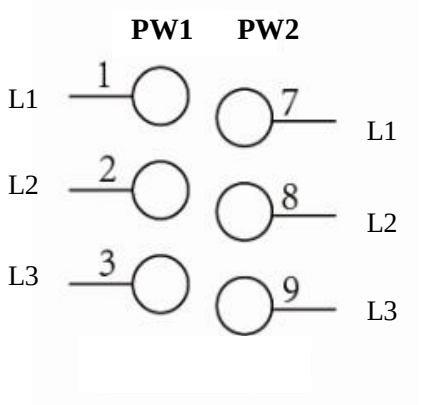

Figure Winding wiring diagram

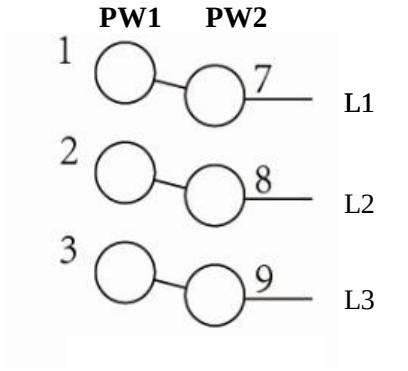

Figure Direct start wiring diagram

- **Suggestions:**

1. Switching time for winding start：0.5s
2. It is suggested that the selection of the motor contactor (k1/k2) requires the respective rated current to be equal to about 60% of the maximum operating current.
3. The starting feature of the partial winding: the starting current is 40% ~ 70% of the total locked rotor current of the winding, and the starting torque is high.

2.4.2 Power requirements

- **Power restriction**

Voltage restriction: Long time operation: Rated voltage ±5%

Instantaneous operation: Rated voltage ±10%

Frequency: Rated frequency ±2%

- **Three-phase voltage unbalance**

The unbalanced three-phase voltage is mainly caused by unequal distribution of three-phase load.

- **NEMA (The Association of Electrical Equipment and Medical Imaging Manufacturers) defines voltage unbalance and current unbalance as below:**

$$\text{Voltage unbalance rate} = \frac{\text{Difference between average and maximum voltage of three phase voltage}}{\text{average valve of voltage}} * 100\ \%$$

$$\text{Current unbalance rate} = \frac{\text{Difference between average and maximum current of three phase current}}{\text{average valve of current}} * 100\ \%$$

The unbalance current will change within the range of 6~10 times of the percentage of voltage unbalance. Over current will cause overheating of the winding, which will shorten the life of the compressor, and even destroy the motor. If the unbalanced voltage is large, the torque will be reduced and the operating requirements cannot be met, so the motor will not be able to get the required rotation speed.

NEMA declares that when the voltage imbalance of the motor terminal is not more than 1%, the multiphase motor can be successfully opened to operating state at rated startup. But it is not allowed to start the motor when the voltage unbalance is more than 5%, which will damage the motor. It is suggested to install an extra high and low voltage protector at the place where the voltage is unstable. Set the rated voltage range within ±5%, to ensure the safe and long-term operation of the compressor.

It is suggested that if the difference of the maximum and minimum phase current is bigger than 3% of the average current during operation, the three-phase power lines can be exchanged as shown in following figures. If the unbalanced phase does not change with phase modulation, it's not the motor problem. Please turn off the machine in time and wait the problem to be solved. If it is motor problem, please contact HANBELL.

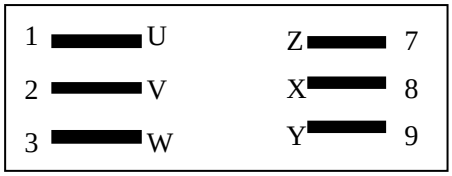

Standard connection of main power supply line

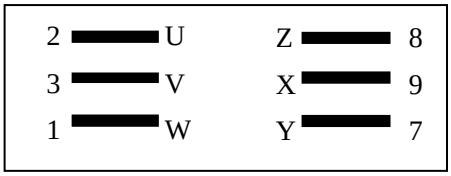

Main power supply line connection during test

2.4.3 Electromagnetic contactor selection

Please refer to the section of contactor in the electrician manual. It is recommended to refer to the AC3 specifications, and to choose the suitable contactor according to the data and the system design.

- **Suggestions**
  1. The set value of the conventional electronic leakage protector should be higher than 50mA (recommend 25mA for moist area).
  2. The grounding resistance should not exceed 500Ω.
  3. If the electronic leakage protector alarm, please check whether the insulation device is normal and its line setting is correct or not.
  4. Please select the appropriate AC contactor, air switch, and power line according to the maximum operating current in below table.

2.4.4 Compressor electrical specification table

Table-4 Compressor motor technical data (Power: 380V/50Hz)

Mode	LBII-100(-P)	LBII-140(-P)	LBII-180(-P)	LBII-200(-P)	LBII-230(-P)	LBII-250(-P)	LBII-280(-P)	LBII-360-P	LBII-410-P
Locked rotor current LRA（A）	218	310	370	508	565	565	710	780	1020
Maximum working current MCC（A）	57	78	94	114	127	138	151	203	232
KM1, KM2 contactor（A）	40	50	65	90	95	95	115	150	150
Wire selection（mm2）	6	10	16	25	25	35	35	50	50

- Locked rotor current: the motor rotor fails to rotate because of heavy load or other reasons, and at this time the

current of the motor is locked rotor current.

- Starting current: the maximum current reached before the motor input current reaches the stable state.
- The highest start and stop frequency: 6 times per hour;
- Shortest operation time: 5 minutes

2.5 Installation and fixation

- When it is applied to normal system, the compressor must be installed horizontally.
- It is suggested that the compressor should not be installed directly on the heat exchanger. If the compressor must be installed in that way due to condition restriction, please ensure the strength of the load-bearing structure.
- It is suggested to use a fixed steel structure supporting frame to install the compressor and use the damping pad to reduce the effect of compressor vibration on the system.
- For marine system, the compressor should be installed along the axial direction of the ship, and the external oil tank and pressure maintenance valve need to be configured. Please contact Hanbell for more installation suggestions.

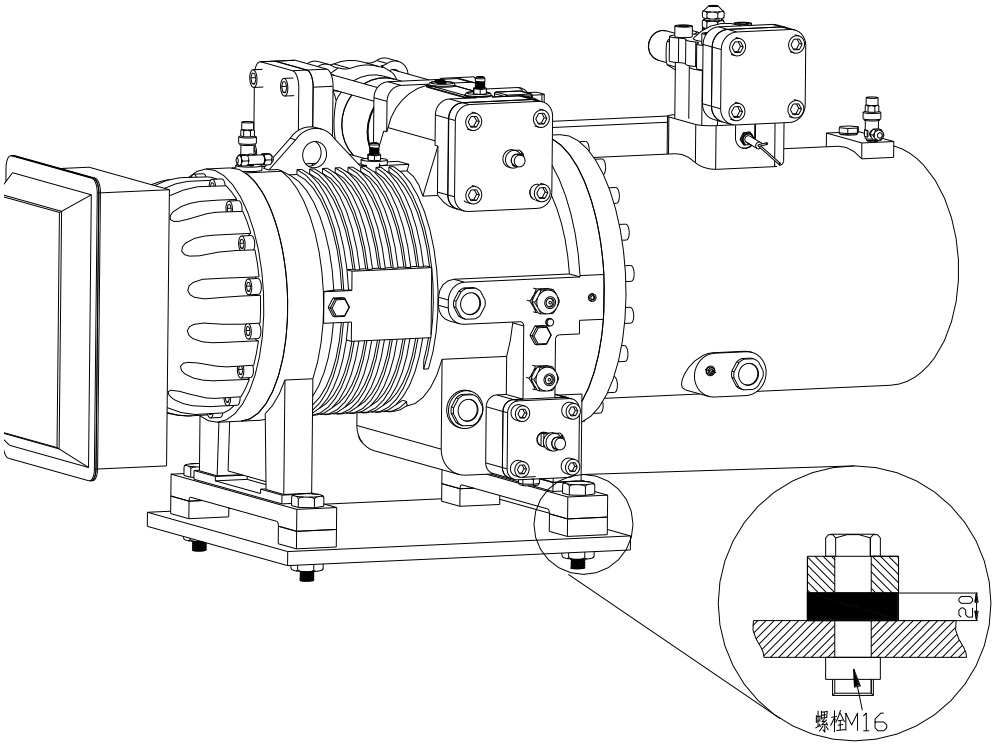

Figure-Installation diagram of compressor damping pad

- When the damping pad is being installed, the four bottom bolts should be uniformly stressed and the nuts should be tightened appropriately, and make sure to use spring gasket in order to ensure they won't be loose during long-term operation of the compressor.
- Suggestions for installation place:

1. Keep away from other heat sources to prevent thermal radiation.
2. Be close to the electric control cabinet for easy wiring.
3. The compressor installation place and direction shall be easy for oil level check and daily maintenance.
4. The installation position shall be strong enough so as not to cause resonance and noise.
5. Avoid installing the compressor in places with high humidity and bad ventilation.
6. Reserve sufficient place for after-sales service.

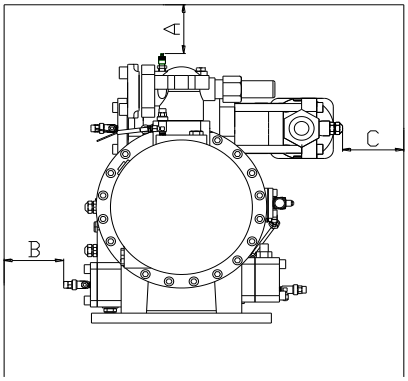

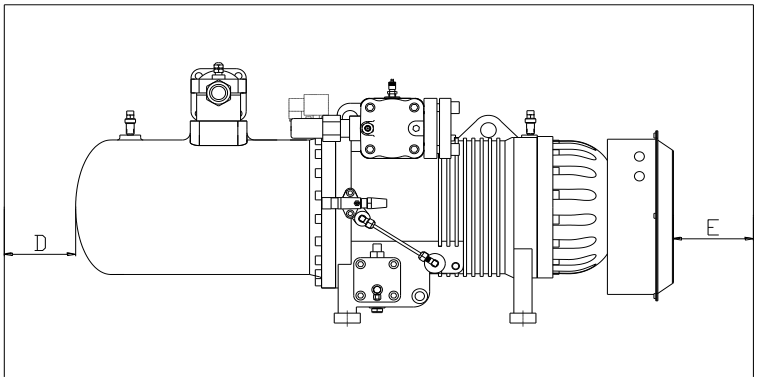

Mode	A(mm)	B(mm)	C(mm)	D(mm)	E(mm)
LBII-100	300	300	300	300	300
LBII-140	310	320	326	335	316
LBII-180	310	320	326	344	316
LBII-200	410	335	426	476	368
LBII-230	410	335	426	476	368
LBII-250	410	335	426	476	368
LBII-280	410	335	426	476	368
LBII-360	400	300	426	300	316
LBII-410	400	300	426	300	316

Figure-Compressor installation diagram

3. Accessory

3.1 Accessory list

Item	Description	Model (●: standard parts / △ : optional parts)		
		Qty	Single	Parallel
1	Discharge stop valve	1	●	●
2	Check valve	1	●	●
3	Suction stop valve	1	●	●
4	Economizer stop valve	1	●	●
5	Bushing for suction& discharge side	1	●	●
6	Damping pad	4	●	●
7	External oil filter differential pressure monitoring switch	1	●	●
8	Protection module	1	●	●
9	Discharge temp. sensor	1	●	●
10	Motor coil temp. sensor	1	●	●
11	Electronic expansion valve and controller	1	●	●
12	Oil line solenoid valve	1	△	●
13	External oil filter	1	△	●
14	Oil flow switch	1	△	●
15	Oil sight glass	1	△	●
16	Oil level switch	/	●	△
17	Pressure maintenance valve	/	△	△
18	Lubricant	/	●	△
19	300W oil heater	1	●	△

Table-5 Accessories list

Note:

1. The final interpretation of the above table belongs to HANBELL.
2. ●: standard parts / △: optional parts
3. The above parts are subject to the contract.

3.2 Oil circuit parts

3.2.1 Oil flow switch

In order to prevent the compressor from losing oil, an oil flow switch should be installed in the compressor system which has an external oil separator.

The specifications of the oil flow switch are shown in the following chart:

Type	Size	Connection	Applicable model
138	3/8"	Thread/weld	LBII-100~180-PLUS
125	5/8"	Thread/weld	LBII-200~410-PLUS

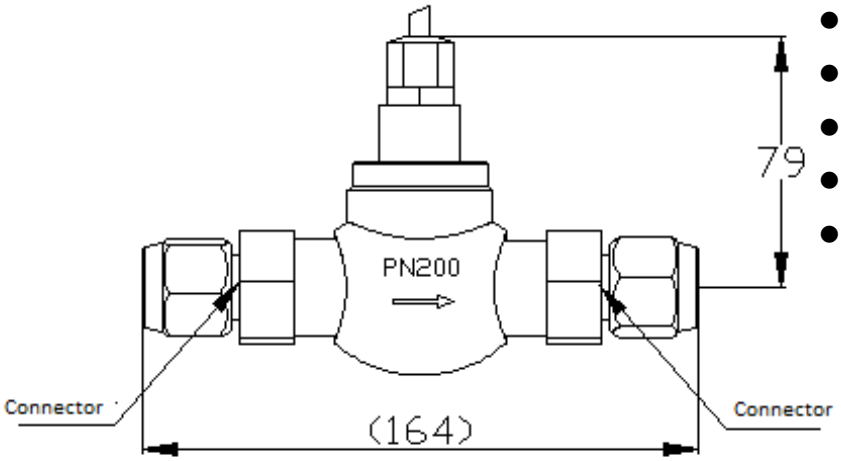

- Max working pressure 200bar
- Max working temp. 100℃
- Protection level IP65
- Max working current 1A
- Max working voltage 230VAC

Figure - Oil flow switch diagram

3.2.2 Oil circuit sight glass

- Sight glass

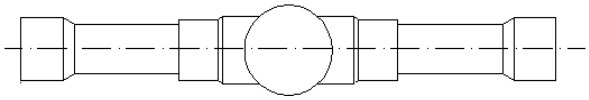

Figure -Oil circuit sight glass

- Max working pressure 35bar
- Max working temp 100℃

3.2.3 External oil filter

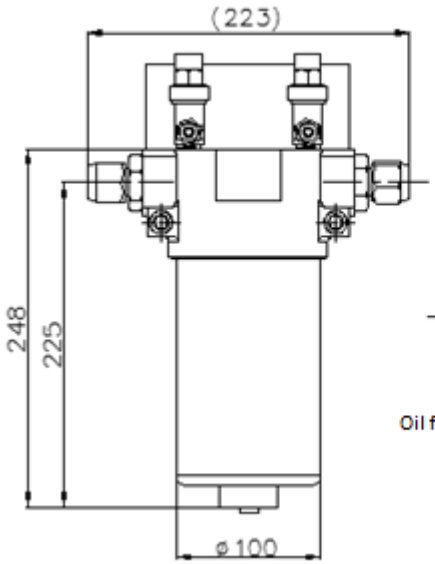

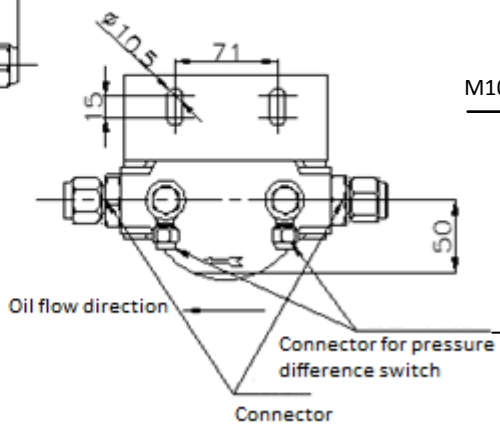

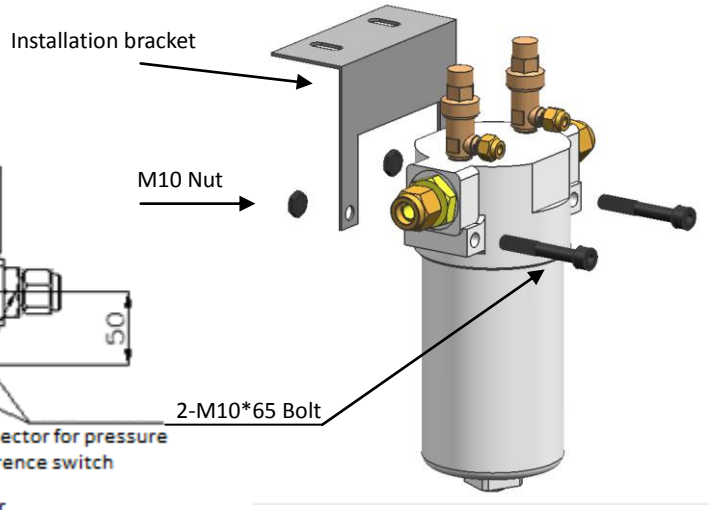

External oil filter bracket installation diagram

- Max working pressure 28bar
- Working temperature-55~120

Specification:

Size	Connection	Applicable model
3/8"	Thread/Weld	LB-100~180-PLUS
5/8"	Thread/Weld	LB-200~410-PLUS

3.2.4 Oil circuit solenoid valve

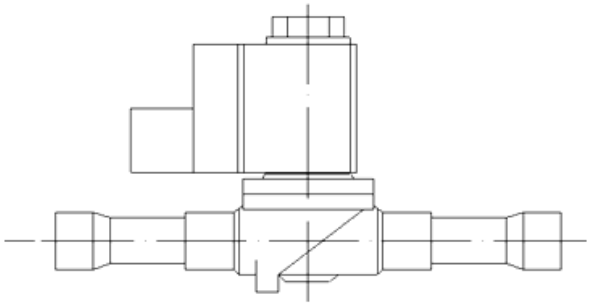

Figure - Oil circuit solenoid valve diagram

- Max working pressure 35bar
- Max working temperature 105℃
- Power 220V/ 50Hz

Direction arrow at the bottom”⟶”

3.2.5 Oil pressure difference switch

Function: check the pressure drop before and after the oil filter. If the pressure drop exceeds the set value, the oil pressure difference switch will jump off , so as to prevent too much the impurity of foreign matter adsorbed on the surface of the oil filter, which will do harm to the oil supply system.

Specification: For oil pressure difference switch provided by HANBELL, the standard jump off value setting is 1.5bar and it can be reset by hand.

Instructions: Non external oil circuit single system, the high pressure connector (HP) of pressure difference switch should be connected to the compressor high pressure connector (high pressure side angle valve or angle valve at the discharge oil separator side).The low pressure connector (LP) should be connected to the compressor oil filter flange angle valve. When the oil resistance is greater than the set value (1.5bar), the pressure difference switch will be activated (OFF) to cut off the compressor circuit to remind the user to clean up the compressor built-in oil filter. Parallel system (or single system with external oil circuit); please install the pressure difference switch at the inlet and outlet of the external oil filter. When it alarm, please clean and replace the oil filter element in time.

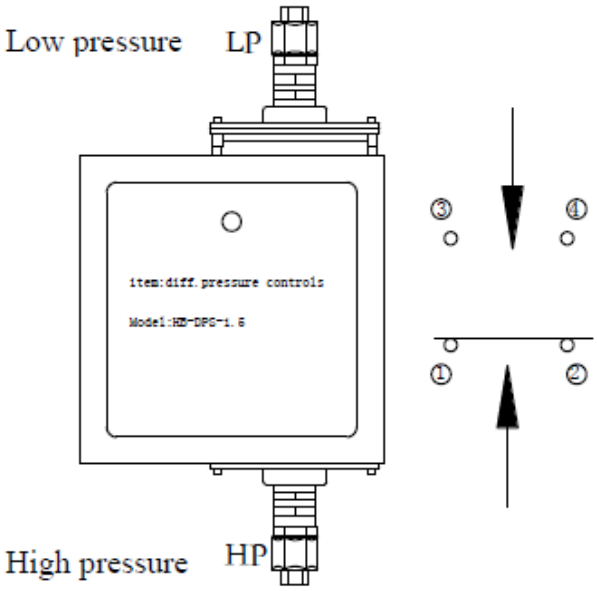

When the pressure difference switch controller is in normal state, 1 and 2 is connected;

When the pressure difference increases and exceeds the set value, 3 and 4 is connected;

Figure - Pressure difference switch diagram

3.3 System parts

3.3.1 Suction and discharge stop valve

In order to ease the maintenance and repair of the machine, it is recommended to install the suction and discharge stop valves for the compressor. Please refer to the following table to know about HANBELL stop valve.

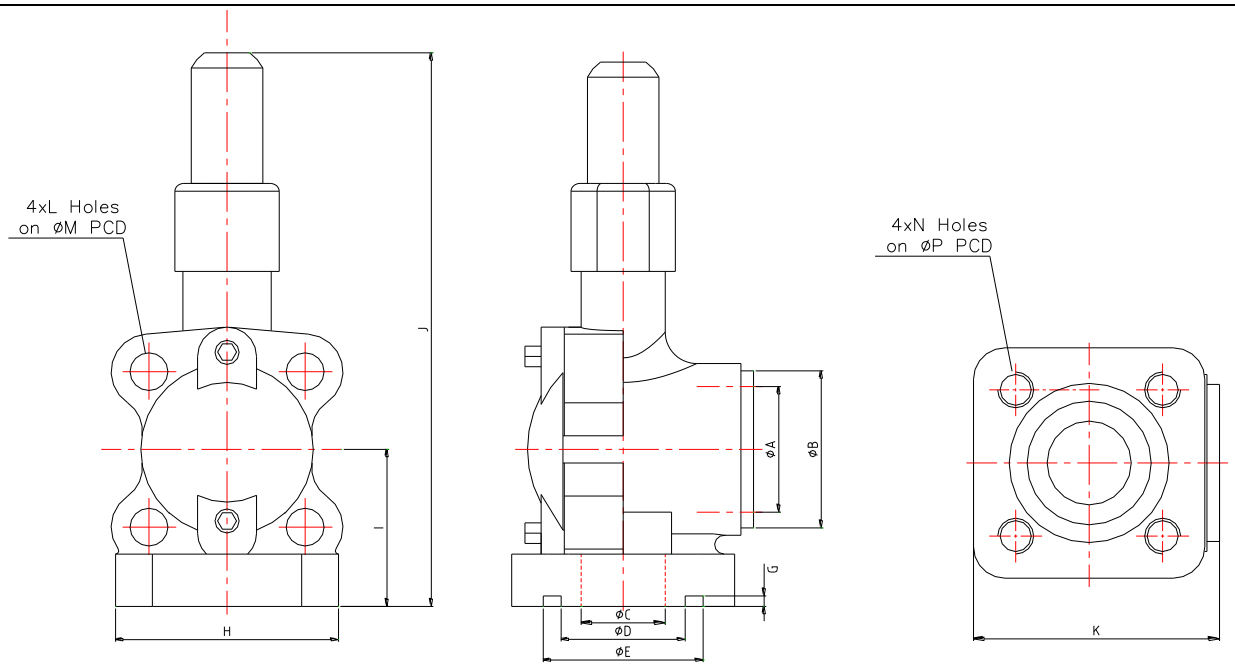

Stop valve dimension

Spec.	Size														Unit: mm
	A	B	C	D	E	F	G	H	I	J	K	L	M	N	P
11/2"	60	75	40	59	76	6	5	108	75	256	115	18	105	M16x2	105
2"	70	90	60	69	91	6	5	122	86	280	128	18	120	M16x2	120
21/2"	90	110	67	89	111	6	5	137	95	307	153	18	140	M16x2	140
3"	100	120	80	99	121	6	5	154	117	398	177	22	160	M20x2.5	160
4"	125	145	105	124	146	6	5	171	130	445	201	22	185	M20x2.5	185

***Stop valve specification**

Max working pressure	Strength test(gas pressure)	Temperature range
28 bar	35 bar	-50～150˚C

3.3.2 Damping pad

Function: To reduce the additional vibration and noise during compressor operation.

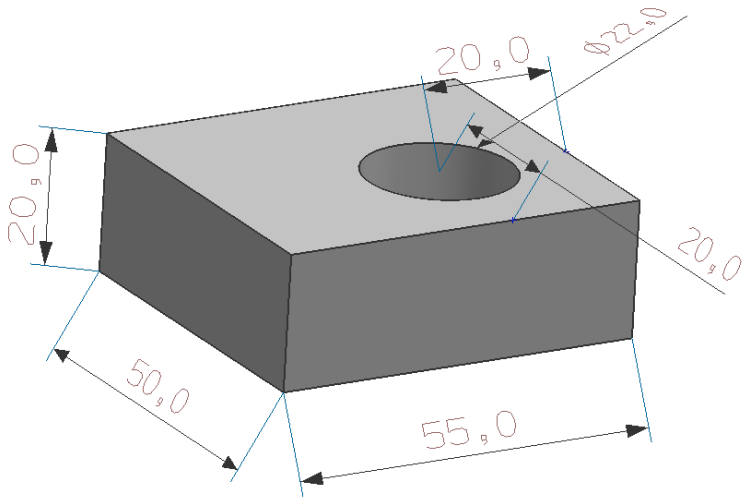

Figure - Compressor damping pad specification (mm)

3.4 Electrical parts

3.4.1 INT69 HBY Diagnose protection module

A. Application description:

The protection module INT69 HBY Diagnose is the advanced product of the protection module series, which is used for the compressor protection microcontrollers. The flexible response function is added in the phase sequence monitoring, which improves the practicability and prolongs the life of the refrigeration system. INT69 HBY Diagnose automatically stores work and error data in a memory. Only through a specific transmission line, the data can be read on a personal computer and be used for diagnostic analysis.

B. Function description:

- The PTC thermistor in series enters the signal input end of the protection module.
- If any resistance value of the thermistors rises above the jump off value, the protection module will jump off. The blocking value of PTC will reduce to the reset value. After 5 minutes of reset time, the module will automatically reset. In the first disconnected 24 hours, if the PTC values rise to the reset value again, the reset time will be 60 minutes. If the PTC third time rise to the reset value in 24 hours, the module will be locked and cannot be reset automatically.
- One second after the motor starts, the motor phase monitoring function will be activated and remain to be activated for 5 seconds. Motor phase being abnormal or motor being under-phase will cause the protection module to be disconnected and locked.
- In order to avoid the tripping caused by reversal after the compressor shutdown, the phase monitoring function will only maintain for 20 seconds after the motor is stopped.
- LED (Red / Green / Orange) shows its working information.
- The motor protection module cannot be used in the variable frequency drive device.
- The PTC short circuit will cause deadlock, and the short cycle will lead to the reset delay.
- If the reset delays when the temperature reduces or the error is removed, please reset the module. The compressor needs to be restarted after the reset.

⚠ This module must be assembled and maintained by a professional electrician. It should have European or national standards. When the module is connected to electrical equipment and cooling devices the connection line between the junction box and the temperature sensor must be the insulation line.

C. Technical data

Item	Technical data	Item	Technical data
Supply voltage	AC 50/60HZ 115/240V±10% 3VA	System PTC short circuit monitoring	Normally <30Ω
Motor voltage	3 AC 50/60Hz 200/690V ±10%	Over frequency operation	Not support
— Sensor type — R25, All — Maximum connection	Connect 1-2 AMS sensors and 1-9 PTC in serial as optional; serial connection shall meet the DIN 44081 and DIN 44082 standards.	—Motor static jump off 1 times/24h 2 times/24h 3times/24h	 5min±1min 60min±12min Deadlock

length	<1.8KΩ 30M	—Switching frequency —Phase stagger —Phase loss Cancel deadlock or reset delay	5min±1min Deadlock Deadlock Power off and reset
Ambient temperature	-30…70℃	Max switching frequency	Switch for 3 times within 30s
Phase monitor — Phase sequence — Phase loss — Inactivation	Activated 1 second after the motor starts and will remain monitoring for 5 seconds; Activated 1 second after the motor starts and will remain monitoring till the machine stops; About 20 seconds after the motor stops.	Delay reset relay —Power —Mechanical lifetime	AC 240V 2.5A C300 at least AC/DC 24V 20mA One million times on and off switching

D. Signal light flashing

The signal light is for convenient, fast and easy maintenance; the signal is composed of red and orange. The current state of light flashing depends on the number of pulse flashes.

Signal is as below:

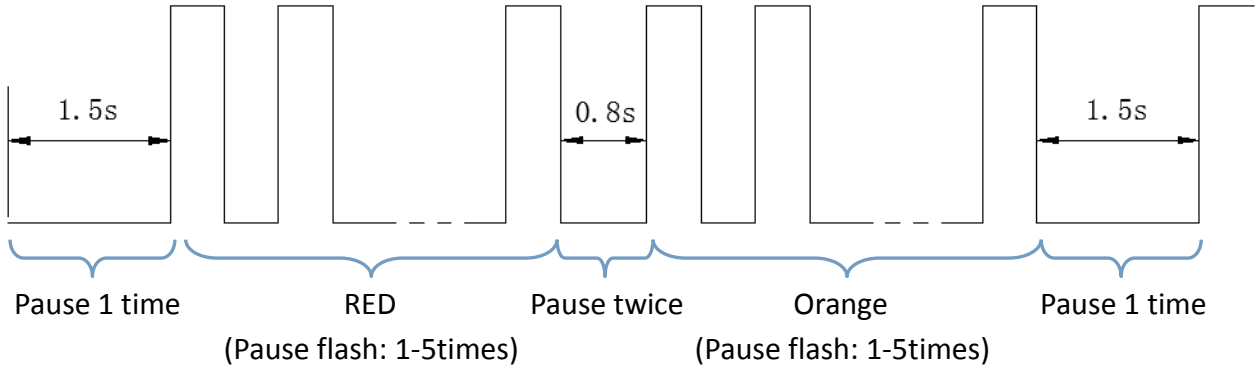

Description	Green	Compressor operation
	Green flash	Compressor operation
	Red/ Organ flash	Faults occur; relay jump off; compressor stop; please refer to below table

First flash sequence (red light)	Second flash sequence (organ light)	Description
1	1	Motor temperature: static jump off; winding temperature over high
	3	Motor temperature: reset delays after static jump off
	4	Motor temperature: temperature sensor detects open circuit or short circuit
2	1	Motor voltage: phase sequence wrong
	2	Motor voltage: phase stagger/three phase asymmetry
3	1	Power supply voltage: module access power supply too low

If the green light is always on but the compressor cannot start: Use the multimeter to test the resistance between M1 and M2. If it is blocked, the protector needs to be replaced.

E. Appearance and wiring

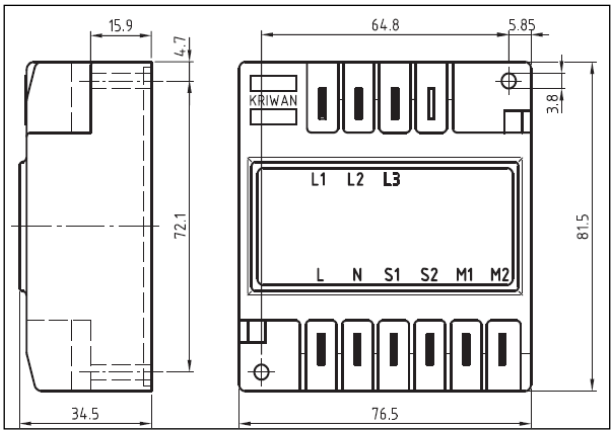

Figure - INT69 HBY Diagnose diagram

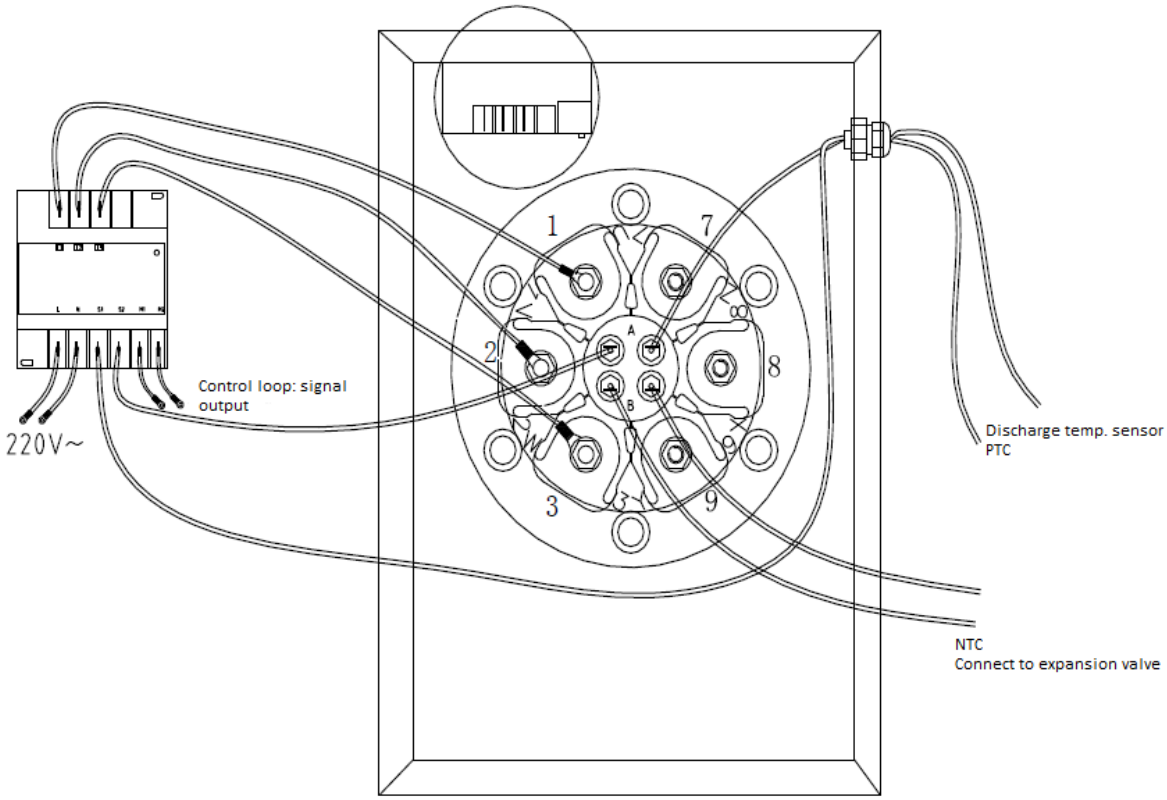

Figure-INT69 HBY&PTC connection diagram

Note: The above figure only indicates the connection method of protection module; it is not the compressor startup mode.

3.4.2 Electronic expansion valve and controller

A. Application and function:

HB-EVC-200LM electronic expansion valve module is used to control the motor temperature of LBII serious compressor. The electronic expansion valve module is composed of an electronic expansion valve and a controller. The controller reads the temperature of the motor through the resistance signal from the motor embedded NTC sensor to automatically control the opening of the electronic expansion valve to achieve automatic control of the liquid spray of the motor.

1. Through the control logic, the controller keeps the motor temperature stable in a safe range, and prevents the motor from serious frosting and high temperature
2. G1 and G2 terminals output 4-20mA current (active output, avoid external power supply), and the corresponding motor temperature is 0-110 ℃. The corresponding table of current temperature is shown in the attached table.
3. Normal operation, relay M2 and M1 are disconnected, M2 and M0 are closed. When the motor temperature is higher than 95 C, M2 and M1 are closed, M2 and M0 are disconnected, and can be connected as required.
4. Terminal A/B can be connected with 2G cloud module or manual operator to modify the internal parameters of the controller. Please refer to the manual for internal parameters modification of electronic expansion valve controller for specific parameters modification.
5. It is necessary to install a solenoid valve in front of the expansion valve to ensure that the compressor starts spraying liquid when it is turned on and stops spraying liquid when it is turned off.
6. Note:

   The compressor can be started only after the controller is powered on for 1min. When the compressor stops and starts again, the interval should be more than 1min, otherwise the motor may be burnt out.

⚠ The module must be assembled and maintained by a professional electrician. The module shall be connected with electrical equipment and cooling device according to European or national standards. Shielded wire is required for 4-20mA current output line.

B. Technical data

Supply voltage	AC 50/60HZ 100-265V ,12Wmax
Output current	4-20mA, corresponding motor temperature 0-110℃
Temperature detection	0-110℃
Sensor type	NTC 10K@25℃,β=3435
Motor temp control	Through the internal control logic, the controller keeps the motor temperature stable in a safe range
Ambient temperature	-20-60℃ operation period 20-80%Rh. no condensation
Over frequency operation	Not support
Start-up frequency	1 time / min at most
Relay	3A/250VAC Resistive load
Mechanical life of expansion valve	1 million cycles
Protection level	IP20
Connection type	Spring terminal
Case material	PA glass reinforced fiber
Installation	By Screw
Size	Unit: mm
Weight	Around 200g
Standard	GB14048.1-2016、GB17626-2008

C. Appearance and wiring

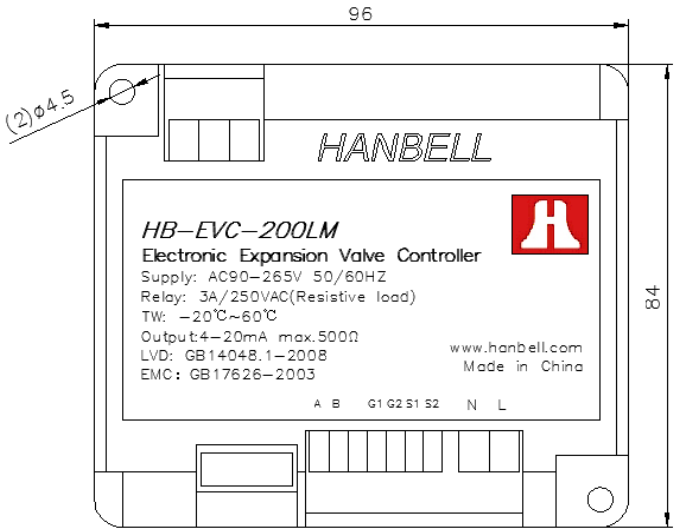

Dimension

Function	Description	Note
NTC Fault	Normal condition: M0 and M1 are normally closed; M0 and M2 are disconnected. Open circuit or short circuit: M0 and M1 are normally disconnected; M0 and M2 are closed.	1) L must be connected to the firing line, N must be connected to the zero line, otherwise the terminal B will burn and the controller cannot operate normally. 2) Wiring correctly, 1min after the controller gets power, the compressor can be switched on. When the compressor is stopped and started again, it needs more than 1min interval, otherwise the motor will be burned.
Motor temp	G1 & G2 side current output 4-20ma, corresponding motor temperature 0-110℃	
Motor temp control	S1 & S2 connect motor NTC	

D. G1-G2 output current and motor temperature comparison table

Motor temp ˚C	Current mA	Motor temp ˚C	Current mA	Motor temp ˚C	Current mA	Motor temp ˚C	Current mA	Motor temp ˚C	Current mA
0	4.00	23	7.35	46	10.69	69	14.04	92	17.38
1	4.15	24	7.49	47	10.84	70	14.18	93	17.53
2	4.29	25	7.64	48	10.98	71	14.33	94	17.67
3	4.44	26	7.78	49	11.13	72	14.47	95	17.82
4	4.58	27	7.93	50	11.27	73	14.62	96	17.96
5	4.73	28	8.07	51	11.42	74	14.76	97	18.11
6	4.87	29	8.22	52	11.56	75	14.91	98	18.25
7	5.02	30	8.36	53	11.71	76	15.05	99	18.40
8	5.16	31	8.51	54	11.85	77	15.20	100	18.55
9	5.31	32	8.65	55	12.00	78	15.35	101	18.69
10	5.45	33	8.80	56	12.15	79	15.49	102	18.84
11	5.60	34	8.95	57	12.29	80	15.64	103	18.98
12	5.75	35	9.09	58	12.44	81	15.78	104	19.13
13	5.89	36	9.24	59	12.58	82	15.93	105	19.27
14	6.04	37	9.38	60	12.73	83	16.07	106	19.42
15	6.18	38	9.53	61	12.87	84	16.22	107	19.56
16	6.33	39	9.67	62	13.02	85	16.36	108	19.71
17	6.47	40	9.82	63	13.16	86	16.51	109	19.85
18	6.62	41	9.96	64	13.31	87	16.65	110	20.00
19	6.76	42	10.11	65	13.45	88	16.80		
20	6.91	43	10.25	66	13.60	89	16.95		
21	7.05	44	10.40	67	13.75	90	17.09		
22	7.20	45	10.55	68	13.89	91	17.24		

3.4.3 Embedded NTC

NTC is one kind of embedded temperature sensor which is installed inside the motor coil. It is connected with the electronic expansion valve to display the temperature of the motor, and precisely control the liquid spray to protect the compressor.

3.4.4 NTC temperature sensor and resistance valve

Empirical value formula: $R = 10 * e^{3435*\left(\frac{1}{273+T}-\frac{1}{273+25}\right)}$; 10 is the resistance valve when temperature comes to 25℃; R is the resistance valve when temperature is T.

Temp	Resistance valve			Temp	Resistance valve			Temp	Resistance valve		
	Max	Typical	Min		Max	Typical	Min		Max	Typical	Min
°C	KΩ	KΩ	KΩ	°C	KΩ	KΩ	KΩ	°C	KΩ	KΩ	KΩ
-10	43,52	42,47	41,43	31	8,11	8,01	7,92	72	2,15	2,10	2,05
-9	41,55	40,57	39,60	32	7,83	7,73	7,63	73	2,09	2,04	1,99
-8	39,69	38,77	37,86	33	7,55	7,45	7,36	74	2,03	1,98	1,93
-7	37,92	37,06	36,21	34	7,29	7,19	7,10	75	1,98	1,92	1,87
-6	36,25	35,44	34,64	35	7,04	6,94	6,85	76	1,92	1,87	1,82
-5	34,66	33,90	33,15	36	6,79	6,70	6,61	77	1,87	1,82	1,77
-4	33,15	32,44	31,73	37	6,56	6,47	6,37	78	1,81	1,77	1,72
-3	31,72	31,05	30,39	38	6,34	6,25	6,15	79	1,76	1,72	1,67
-2	30,36	29,73	29,11	39	6,12	6,03	5,94	80	1,72	1,67	1,62
-1	29,06	28,48	27,89	40	5,92	5,83	5,74	81	1,67	1,62	1,58
0	27,83	27,28	26,74	41	5,72	5,63	5,54	82	1,62	1,58	1,53
1	26,65	26,13	25,62	42	5,53	5,44	5,35	83	1,58	1,53	1,49
2	25,52	25,03	24,55	43	5,34	5,26	5,17	84	1,54	1,49	1,45
3	24,44	23,99	23,54	44	5,17	5,08	4,99	85	1,49	1,45	1,41
4	23,42	23,00	22,57	45	5,00	4,91	4,83	86	1,45	1,41	1,37
5	22,45	22,05	21,66	46	4,83	4,75	4,67	87	1,42	1,37	1,33
6	21,53	21,15	20,78	47	4,68	4,59	4,51	88	1,38	1,34	1,30
7	20,64	20,30	19,95	48	4,52	4,44	4,36	89	1,34	1,30	1,26
8	19,81	19,48	19,15	49	4,38	4,30	4,22	90	1,31	1,27	1,23
9	19,01	18,70	18,39	50	4,24	4,16	4,08	91	1,27	1,23	1,19
10	18,25	17,96	17,67	51	4,10	4,03	3,95	92	1,24	1,20	1,16
11	17,51	17,24	16,97	52	3,97	3,90	3,82	93	1,21	1,17	1,13
12	16,81	16,56	16,30	53	3,85	3,77	3,70	94	1,17	1,14	1,10
13	16,14	15,90	15,67	54	3,73	3,65	3,58	95	1,14	1,11	1,07
14	15,50	15,28	15,06	55	3,61	3,54	3,46	96	1,12	1,08	1,04
15	14,89	14,69	14,48	56	3,50	3,43	3,35	97	1,09	1,05	1,02
16	14,31	14,12	13,92	57	3,39	3,32	3,25	98	1,06	1,02	0,99
17	13,75	13,58	13,39	58	3,28	3,22	3,15	99	1,03	1,00	0,97
18	13,22	13,06	12,89	59	3,18	3,12	3,05	100	1,01	0,97	0,94
19	12,72	12,56	12,40	60	3,09	3,02	2,95	101	0,98	0,95	0,92
20	12,24	12,09	11,94	61	2,99	2,93	2,86	102	0,96	0,92	0,89
21	11,77	11,63	11,50	62	2,90	2,84	2,77	103	0,93	0,90	0,87
22	11,32	11,20	11,07	63	2,82	2,75	2,69	104	0,91	0,88	0,85
23	10,90	10,78	10,66	64	2,73	2,67	2,61	105	0,89	0,86	0,83
24	10,49	10,38	10,27	65	2,65	2,59	2,53	106	0,87	0,84	0,81
25	10,10	10,00	9,90	66	2,57	2,51	2,45	107	0,84	0,82	0,79
26	9,73	9,63	9,53	67	2,50	2,44	2,38	108	0,82	0,80	0,77
27	9,38	9,28	9,18	68	2,42	2,36	2,31	109	0,80	0,78	0,75
28	9,04	8,94	8,84	69	2,35	2,30	2,24	110	0,79	0,76	0,73
29	8,72	8,62	8,52	70	2,28	2,23	2,17				
30	8,41	8,31	8,21	71	2,22	2,16	2,11				

Table-NTC sensor temperature and resistance valve 10K@25℃

4. Maintenance

4.1 Items to be checked before machine starting

Item	Key points to be checked	Corresponding confirmation method
1. Compressor and spare part appearance check	1.Refrigerant oil level; 2.Lubricant oil temperature; 3. Stop valve completely open; 4.Motor liquid injection angle valve completely open	1. High oil level is full; 2. Before trial operation, the oil need to be heated to around 40°C, the time required for heating is about 8 hours; 3. Open the stop valve dustproof nut to check; 4. Open the motor injection valve dustproof nut to check;
2. Electrical system	1. Main power supply voltage value 2. Control circuit voltage value 3. Inter-phase and ground insulation resistance of motor 4. Connection between power and wire 5. Grounding wire installation 6. Switch, sensor, and controller setting	1. The voltage fluctuation range of the main power supply is controlled within the rated voltage 380V±5%, and the instantaneous voltage drop is less than 10% when it starts; 2. The standard voltage of the control circuit is 220V±10%; if there are other requirements, please contact Hanbell; 3. Insulation value shall be higher than 5MΩ; 4. The power supply is connected to the terminal box with good insulation. The power line should be far away from the heat source and the metal with angular angle, so as to avoid the damage of the insulation skin. It should be equipped with a terminal box and bolt; 5.Make sure it is installed;
3. Pipeline system	1. Whether the pipe is secured or not; 2. Make sure no leakage on the pipe	1. Visual check or manual check 2. Check with a leak detector or soapy water, especially at the welding area and interface.
4. Protection device	1. Coil temp protection 2. Discharge temp protection 3. Oil level switch	1. Not activated(closed circuit) 2. Not activated(closed circuit) 3. Full oil level(closed circuit)

Table - Items to be checked before machine starting

4.2Items to be checked during operation

- Power on the compressor for about 0.5-1 seconds to determine whether the compressor rotation is normal or not by monitoring the suction and discharge pressure (the normal rotation of the compressor: the suction pressure drops immediately and the discharge pressure rises).
- After starting, check the lubricating oil in the sight glass on the external oil line to find out whether it is full or not. If you find any problems, please check the pressure difference between the high and low pressure, check if the filter is blocked or not (pressure difference alarm), whether the oil return solenoid valve of the external oil separator is open or not, if the oil outlet is blocked or not, check whether the motor temperature rise too fast, whether spray liquid pipe supplies liquid or not.
- When the compressor starts, the lubricating oil in the oil separator will produce foam in short time, but the

lubricating oil foam will disappear when the compressor works under the rated condition. In general, the normal oil level in the oil separator shall be above the middle level of the low oil level sight glass, and the minimum level shall not be lower than the middle level of the low oil level sight glass, otherwise it means insufficient oil filling or compressor oil losing.

- The operating conditions should be adjusted according to the following way: the discharge temperature should be over 30K than that of condensing temperature, and the over-heat of the suction is within 15K.
- The whole equipment, especially the pipe, must pass the abnormal vibration test. If there is abnormal vibration or noise during the operation of the compressor, please contact HANBELL.
- If the compressor is in long-time operation, the following items should be checked daily: machine operation data (such as: three-phase voltage, line current etc.), the oil temperature and oil level of the lubricant, all sensing parts, the connecting and fastening of the wire, and the sight line of the oil circuit.
- When the condensing unit is in operation, special attention should be paid to its auxiliary equipment, as well as the maintenance schedule of the unit after the first start operation.
- To ensure normal viscosity of the lubricating oil at low ambient temperature and ensure smooth lubrication of the bearing, it is recommended that the oil heater on the external oil separator should be kept open when the compressor is shut down, so as to prepare for the next start.

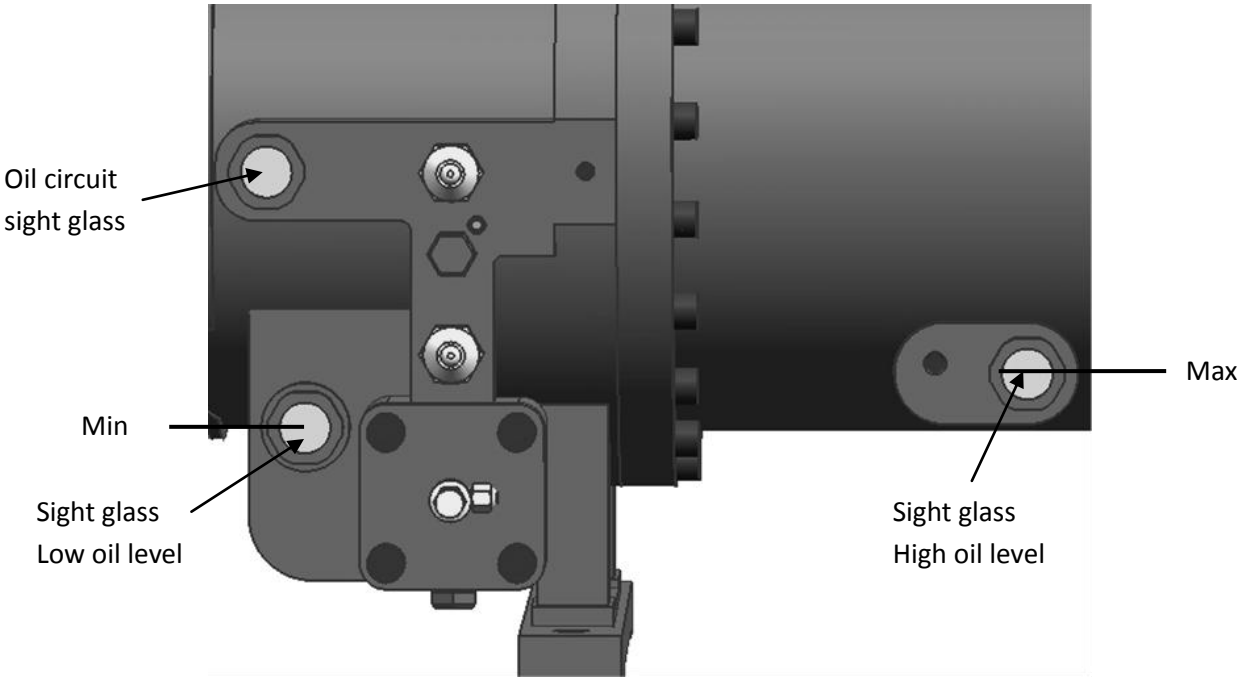

Figure - Compressor oil level mark

Note:

When compressor is running, the oil level needs to be between the middle line of the high oil sight glass and the low oil sight glass. Through the sight glass, the flow of lubricating oil can be seen and the oil is clear and transparent. If the oil level is lower than the low oil level sight glass, it is necessary to shut down and refuel. Please check whether the suction is with liquid or not (oil return shows white or a large number of bubbles occurs), because it will lead to the sharply increase of oil losing of oil separator, which finally causes the compressor to lose oil.

If the discharge temperature is too low and the boot lubricating oil temperature of the oil separator is too low, it will also cause the refrigerant dissolves in the lubricating oil, which will not only cause the compressor bearing damage, and also make it easier for compressor oil loss. If it is a full liquid system, please check whether the oil return solenoid valve is opens the oil return according to the set control logic.

⚠ Emergency stop

- Cut off the power supply and stop the compressor. For major accidents, please cut off the main switch of the compressor power supply, the whole compressor will be stopped.
- Close all the fluid supply valves on the system as soon as possible, and close the suction and discharge valves of the compressor.
- Find out the causes of the failure or accident and eliminate it.
- In case of sudden power outage, in addition to close the suction, discharge valve and evaporator supply valve in time, the power switch should be cut off and the cause of power outage should be ascertained.

4.3 Faults analysis

Faults	Possible reasons
Compressor motor coil temperature protection jump off	1. The motor load is too large, the cooling is insufficient or the motor liquid spray solenoid valve is invalid. 2. Coil protection switch failure 3. Poor electrical system or failure 4. Poor motor coil, temperature increase too high 5. Controller of electronic expansion valve failure
Poor motor insulation	1. The wire joint of the compressor motor is humid. 2. Compressor motor failure. 3. Poor compressor wiring terminal 4. The electromagnetic contactor is poorly insulated. 5. Internal acidification of the system, corrosion and insulation 6. The coil is running at high temperature for long time, causing deterioration of the insulation. 7. Frequent start, coil deterioration. 8. Too much water contained in the refrigerant
The motor cannot be started or switched	1. Voltage too low or voltage error. 2. The voltage drop of the starting voltage is too large and the electromagnetic contactor cannot be absorbed. 3. Motor failure. 4. Under-phase, reverse phase and lack of phase 5. Motor protection switch activated. 6. Incorrect wiring of motor coil. 7. Bad △-△ start timer 8. The current setting is too small or the improper selection of circuit breaker. 9. Poor electromagnetic contactor

Abnormal vibration or noise	1. Bearing damage. 2. Compressor liquid compression. 3. The rotor is overheated & friction with the rotor or the shell. 4. Oil loss causes poor lubrication. 5. The internal parts loose 6. Poor piping, without flexible stretch causing resonance 7. The foreign matter enters the compression chamber.
Discharge temperature too high	1. High overheat of suction refrigerant (insufficient refrigerant, abnormal expansion valve). 2. High pressure too high (bad cooling, air comes into the system, high temperature of cooling water, insufficient cooling water flow, poor heat transfer effect of condenser). 3. The compression ratio is too large, no auxiliary cooling. 4. Bearing damage, rotor friction. 5. The loss of oil or oil level is too low.
System low pressure alarm	1. Insufficient refrigerant 2. The evaporator has severe frosting, which affects heat transfer. 3. The opening of the expansion valve is too small, the temp package is loose, and the thermal insulation is not made. 4. The suction filter is frozen or dirty. 5. The evaporator is too small. 6. Low pressure protection setting problem.
System high pressure alarm	1. Too much refrigerant 2. The effect of heat exchange is not good 3. The discharge temperature is too high. 4. The expansion valve is dirty and blocked. 5. The condenser is too small. 6. High pressure protection setting problem.
Oil flow alarm	1. Oil flow switch failure 2. The condensing pressure cannot be set up at starting, and the oil supply pressure difference is not enough. 3. Oil circuit blocked 4. Oil circuit solenoid valve failure
Discharge temperature too low	1. Compressor suction has fluid 2. Oil return temperature too low 3. The opening of the expansion valve of the system is too large 4. The opening of the economic expansion valve is too big
Insufficient oil supply in compressor	1. Discharge temperature too low 2. Oil separator filter failure 3. Oil temperature of the oil separator is too low (not open oil heater before starting) 4. Suction or gas supplement has liquid 5. Economic expansion valve opening is too big 6. Insufficient oil returning during suction 7. Excessive pressure drop in external oil circuit, poor oil supply

5. Appearance and functions

5.1 Appearance structure

■ **External structure-single machine**

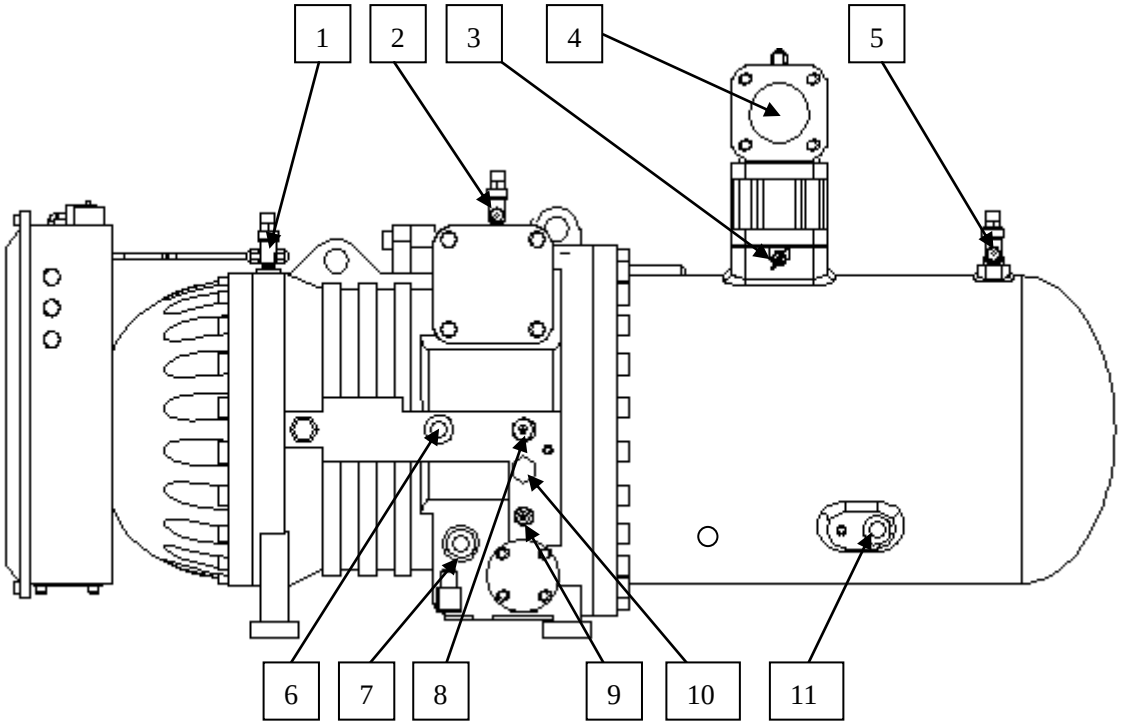

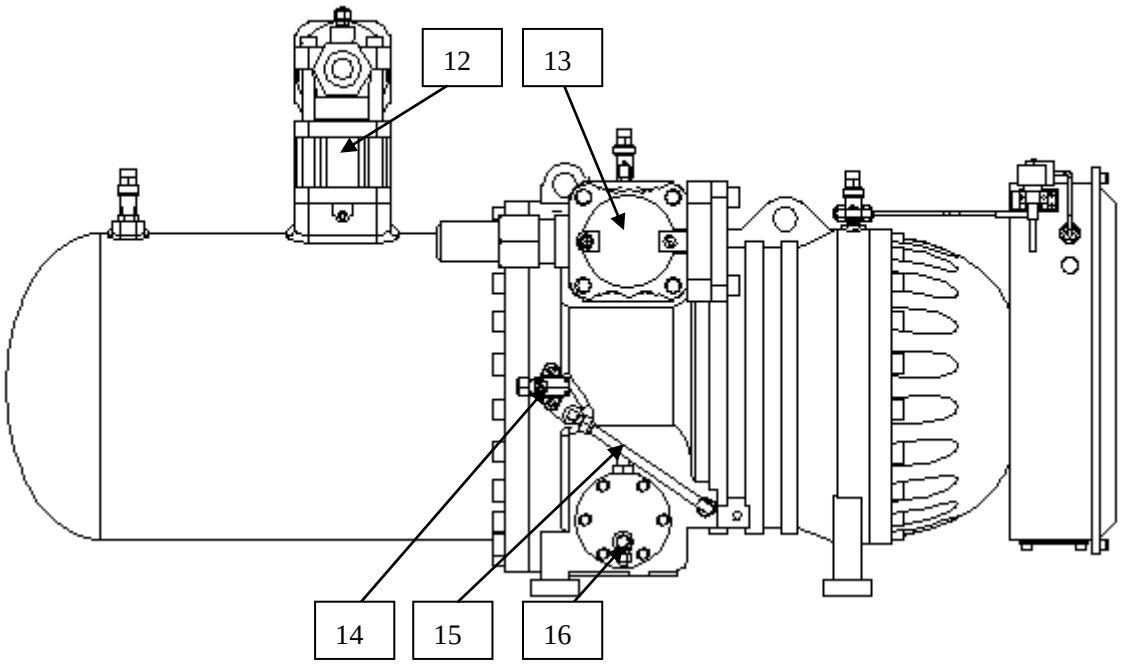

LBII-100~280-PLUS Low temperature screw compressor external structure

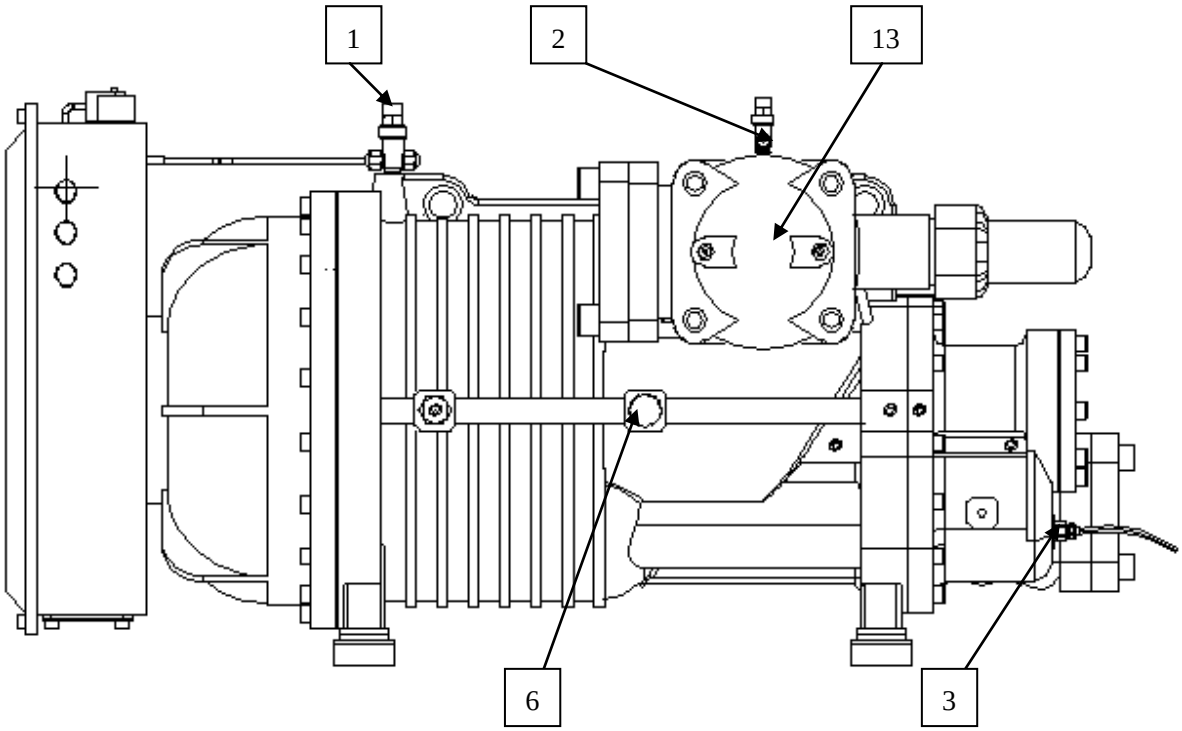

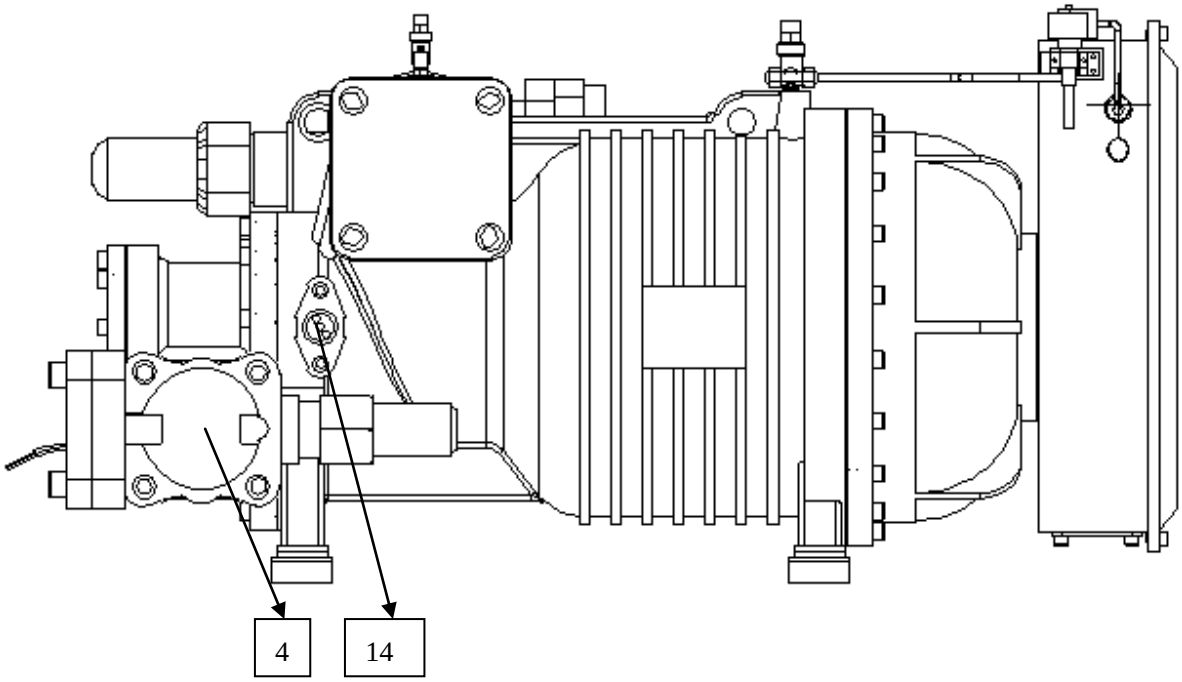

LBII-360/410-PLUS Low temperature screw compressor external structure

No	Parts	LBII-100~180	LBII-100~180-P	LBII-200~280	LBII-200~280-P	LBII-360/410-P
1	Motor liquid injection angle valve	1/4″	1/4″	1/4″	1/4″	1/4″
2	Low pressure detective valve	1/4″	1/4″	1/4″	1/4″	1/4″
3	Discharge temp sensor	PTC	PTC	PTC	PTC	PTC
4	Discharge stop valve	1-1/2″	1-1/2″	2″	2″	2-1/2″ &3″
5	High pressure detective valve	1/4″	1/4″	1/4″	1/4″	1/4″
6	Oil circuit sight glass	✓	✓	✓	✓	×
7	Low oil level sight glass	✓	✓	✓	✓	×
8	Oil inlet connector	3/8″	3/8″	5/8″	5/8″	5/8″
9	Oil outlet connector	3/8″	×	5/8″	×	×
10	Oil block pin	×	✓	×	✓	×
11	High oil level sight glass	✓	×	✓	×	×
12	Discharge check valve	1-1/2″	1-1/2″	2″	2″	2-1/2″ &3″
13	Suction stop valve	2″	2″	3″	3″	4″
14	Economizer connector	∅22(Copper)	∅22(Copper)	∅22(Copper)	∅22(Copper)	∅28.8(Copper)
15	Motor gas return pipe	✓	✓	✓	✓	✓ (Internal flow channel)
16	Pressure difference switch connector	1/4″	×	1/4″	×	×

"✓": Standard
"×": Optional

5.2 LBII-100~410-PLUS Connector

⚠ **Note:** The size in the table is fitted with bushing size

Model -PLUS	Discharge	Copper	Steel	Suction	Copper	Steel	Economizer	Main oil inlet	Main oil return	Motor liquid injection port
LBII-100	1-1/2"	Φ42	Φ49.3	2"	Φ55	Φ61.3	Φ22 (Welding)	3/8"（Φ9.7）	3/8"（Φ9.7）	1/4"（Φ6.5）
LBII-140	1-1/2"			2"			Φ22 (Welding)	3/8"（Φ9.7）	3/8"（Φ9.7）	1/4"（Φ6.5）
LBII-180	1-1/2"			2"			Φ22 (Welding)	3/8"（Φ9.7）	3/8"（Φ9.7）	1/4"（Φ6.5）
LBII-200	2"	Φ55	Φ61.3	3"	Φ80.5	Φ90.2	Φ22 (Welding)	5/8"（Φ16）	5/8"（Φ16）	1/4"（Φ6.5）
LBII-230	2"			3"			Φ22 (Welding)	5/8"（Φ16）	5/8"（Φ16）	1/4"（Φ6.5）
LBII-250	2"			3"			Φ22 (Welding)	5/8"（Φ16）	5/8"（Φ16）	1/4"（Φ6.5）
LBII-280	2"			3"			Φ22 (Welding)	5/8"（Φ16）	5/8"（Φ16）	1/4"（Φ6.5）
LBII-360	2-1/2"	Φ68	Φ77	4"	Φ93	Φ110	Φ28.8(Welding)	5/8"（Φ16）	5/8"（Φ16）	1/4"（Φ6.5）
LBII-410	3"	Φ80.5	Φ90.2	4"			Φ28.8(Welding)	5/8"（Φ16）	5/8"（Φ16）	1/4"（Φ6.5）

LBII Bushing Size

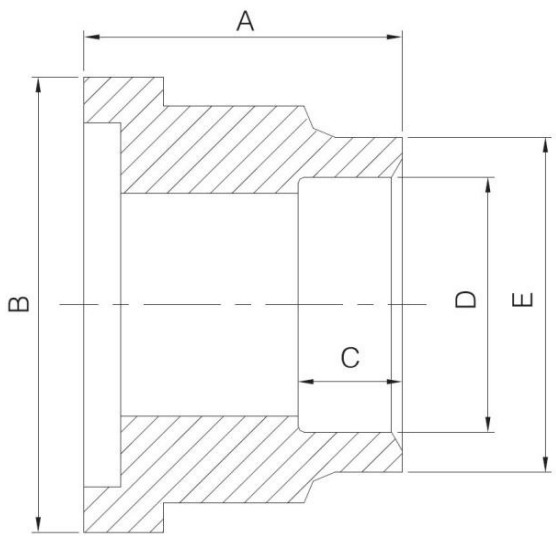

Model	Position	Material& Size		Bushing size				
				A	B	C	D	E
LBII-100-(P)-PLUS LBII-140-(P)-PLUS LBII-180-(P)-PLUS	Discharge	Copper	1 5/8"	42	75	35	42	52
		Steel	1 1/2"				49.3	64
	Suction	Copper	2 1/8"	50	90	30	55	65
		Steel	2"				61.3	74
LBII-200-(P)-PLUS	Discharge	Copper	2 1/8"	50	90	30	55	65

LBII-230-(P)-PLUS		Steel	2"				61.3	74
LBII-250-(P)-PLUS	Suction	Copper	3 1/8"	66	120	45	80.5	90
LBII-280-(P)-PLUS		Steel	3"				90.2	103
LBII-360-P-PLUS	Discharge	Copper	2 5/8"	60	110	35	68	77
		Steel	2 1/2"				77	90
	Suction	Copper	3 5/8"	76	145	50	93	103
		Steel	4"				110	128
LBII-410-P-PLUS	Discharge	Copper	3 1/8"	66	120	45	80.5	90
		Steel	3"				90.2	103
	Suction	Copper	3 5/8"	76	145	50	93	103
		Steel	4"				110	128

5.3 LBII-100~280-PLUS Dimension

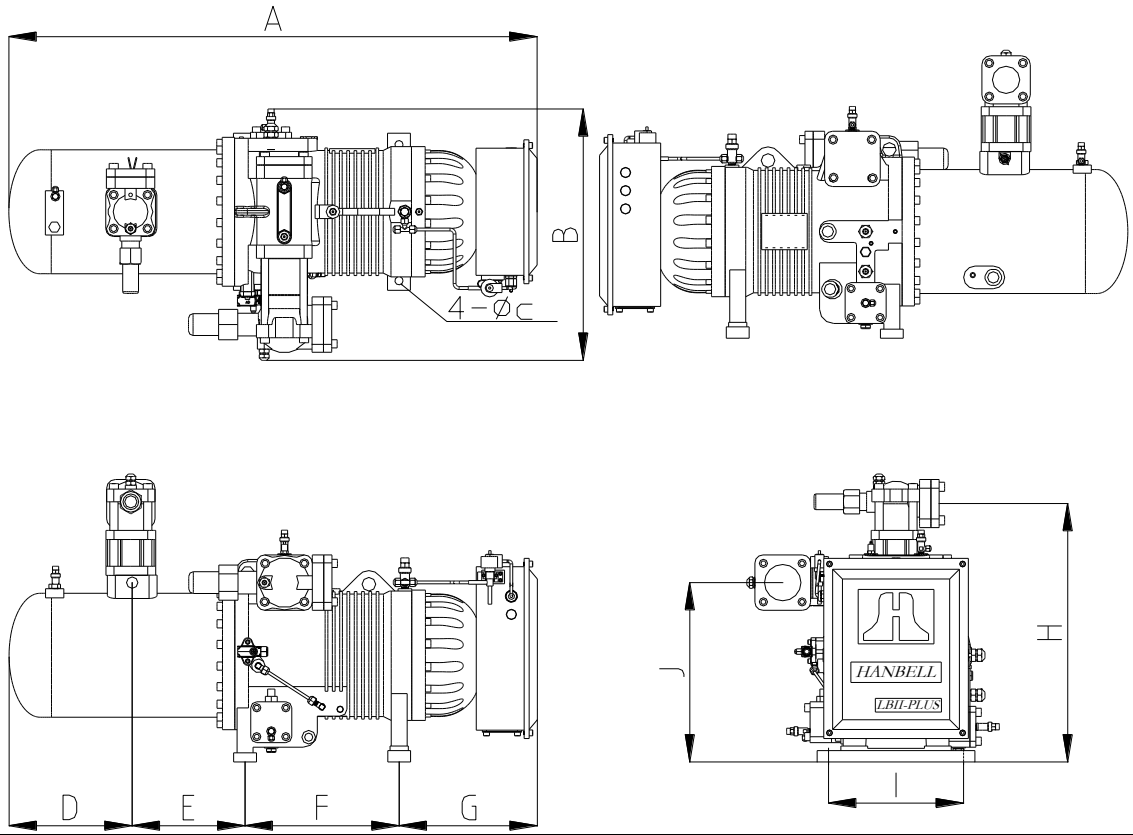

Model	A	B	C	D	E	F	G	H	I	J
LBII-100	1163.5	554	18	(275)	247.5	338	303	569	300	395
LBII-140	1199	584	18	(297)	255.5	339	308	578	350	402.5
LBII-180	1263	584	18	(297)	255.5	405	308	578	350	402.5
LBII-200	1410	645	18	(427)	270.3	390	332	683	350	449.5
LBII-230~280	1445	649	18	(427)	265.3	411	340	683	386	483

5.4LBII-100~280P-PLUS Dimension

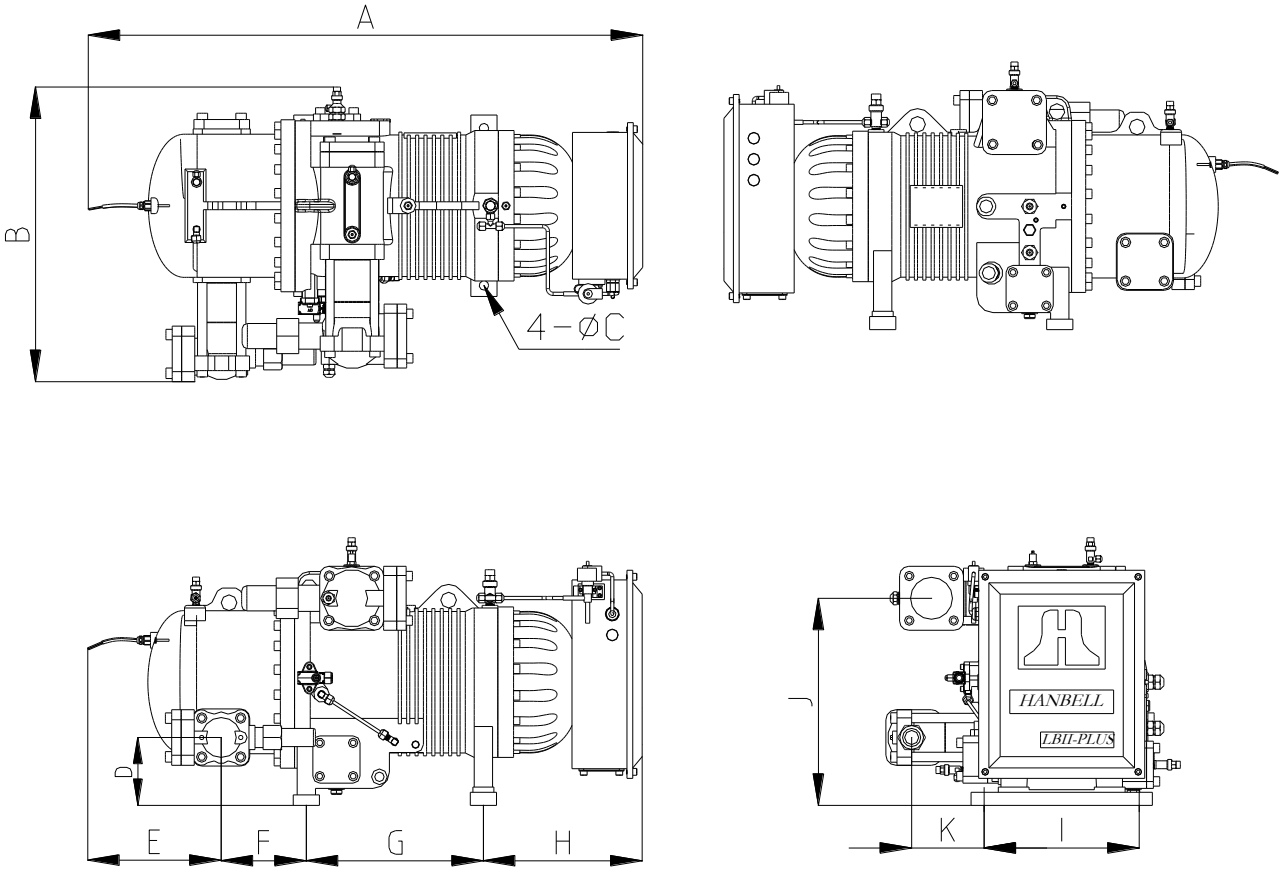

Model	A	B	C	D	E	F	G	H	I	J	K
LBII-100-P	1004	562	18	129.5	(254)	163.5	338	303	300	395	133
LBII-140-P	1017	597	18	117	(241)	177	339	308	350	402.5	104
LBII-180-P	1083	611	18	117.6	(241)	177	405	308	350	402.5	104
LBII-200-P	1186	630	18	112.5	(235)	230	390	332	350	449.5	158
LBII-230~280-P	1218	630	18	112.5	(235)	234	411	340	386	483	152

5.5 LBII-360/410-PLUS Dimension

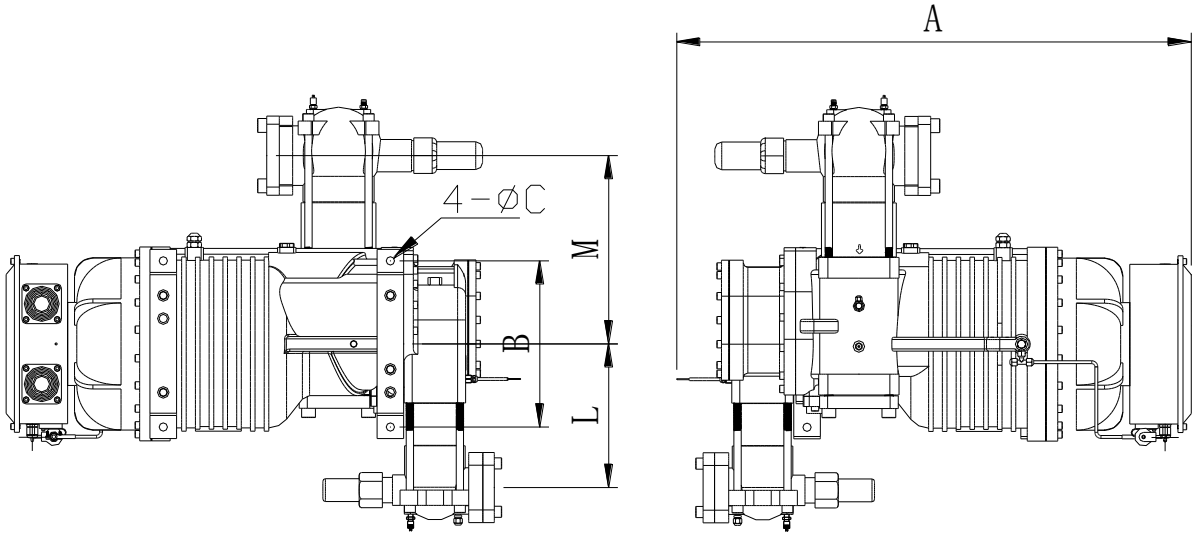

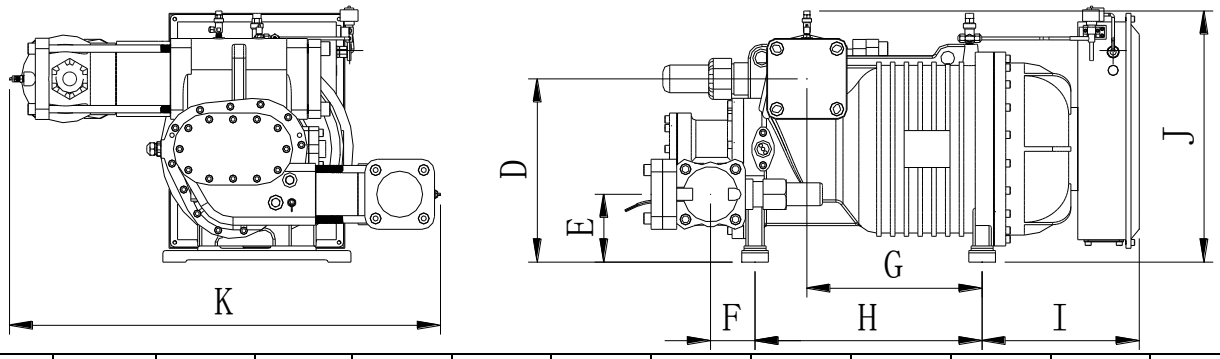

Model	A	B	C	D	E	F	G	H	I	J	K	L	M
LBII-360	1137	360	18	397	147	98	384.5	495	342.5	538	939	301	408
LBII-410	1237	360	18	397	156	106	465.8	576.3	342.5	538	949	327	408

5.6 LBII-100~280-PLUS Dimension

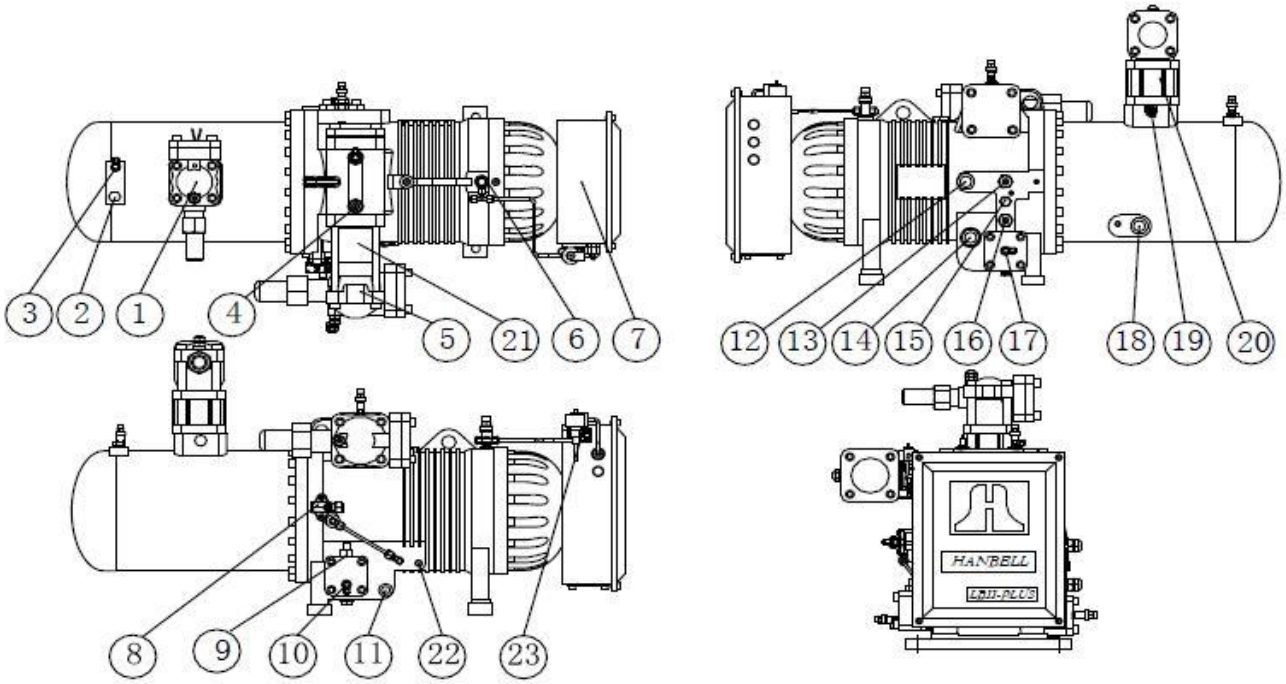

No.	Parts	Remark	No.	Parts	Remark
1	Discharge stop valve		13	Oil inlet connector	
2	Safety valve plug		14	Low oil level sight glass	
3	High pressure angle valve	1/4”	15	Oil block pin	
4	Low pressure filling valve	1/4”	16	Oil outlet connector	
5	Low pressure stop valve		17	Angle valve	1/4”
6	Motor chamber angle valve	1/4”	18	High oil level sight glass	
7	Terminal box	IP54	19	Discharge temp sensor PTC	
8	Economizer connector	7/8”	20	Discharge check valve	
9	Liquid level switch		21	Suction check valve	
10	Angle valve	1/4”	22	Fixing hole	
11	Heater	220V/300W	23	Electronic expansion valve	
12	Oil circuit sight glass				

5.7 LBII-100~280-P-PLUS Dimension

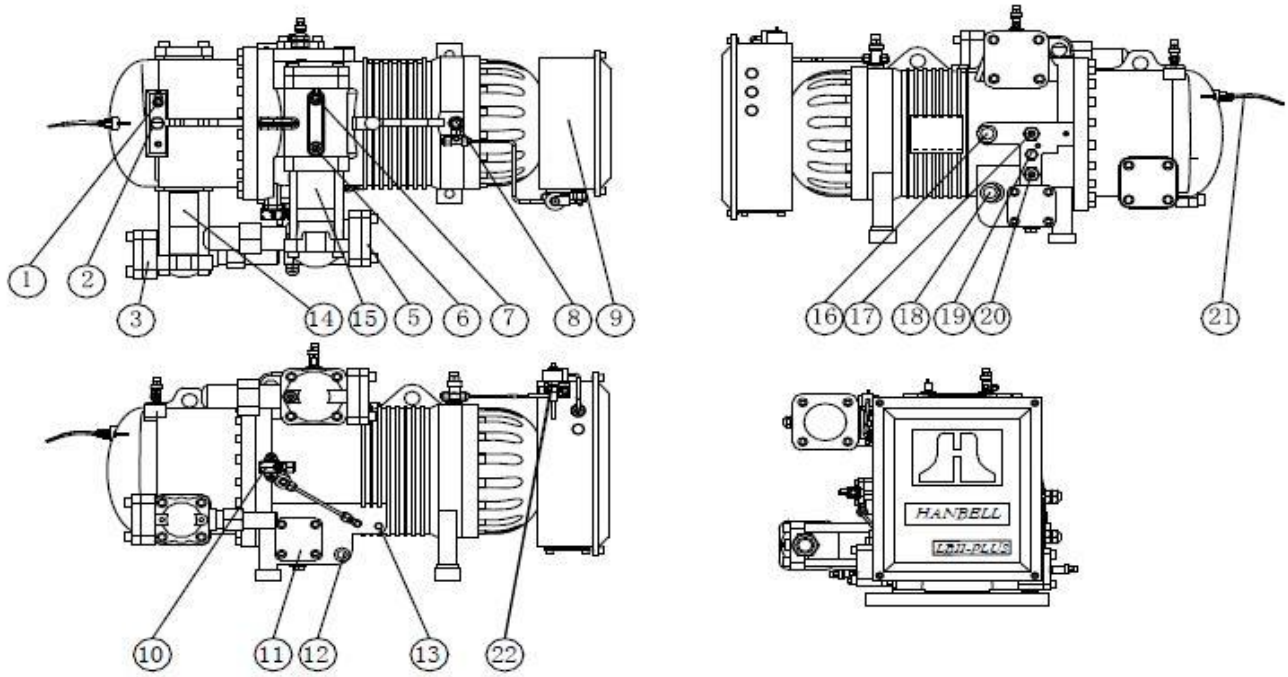

No.	Parts	Remark	No.	Parts	Remark
1	Angle valve	1/4”	12	Plug	
2	Safety valve plug	1/2” NPT	13	Motor temperature sensing hole	
3	Discharge stop valve		14	Discharge check valve	
4	Solenoid valve		15	Suction check valve	
5	Suction stop valve		16	Oil circuit sight glass	
6	Filling valve	1/4”	17	Oil inlet connector	
7	Low pressure side angle valve	1/4”	18	Plug	
8	Motor liquid injection port	1/4”	19	Oil block pin	
9	Terminal box		20	Plug	
10	Economizer	7/8”	21	Discharge temp sensor PTC	110C
11	Cleaning hole cover		22	Electronic expansion valve	

5.8 LBII-360/410-PLUS Dimension

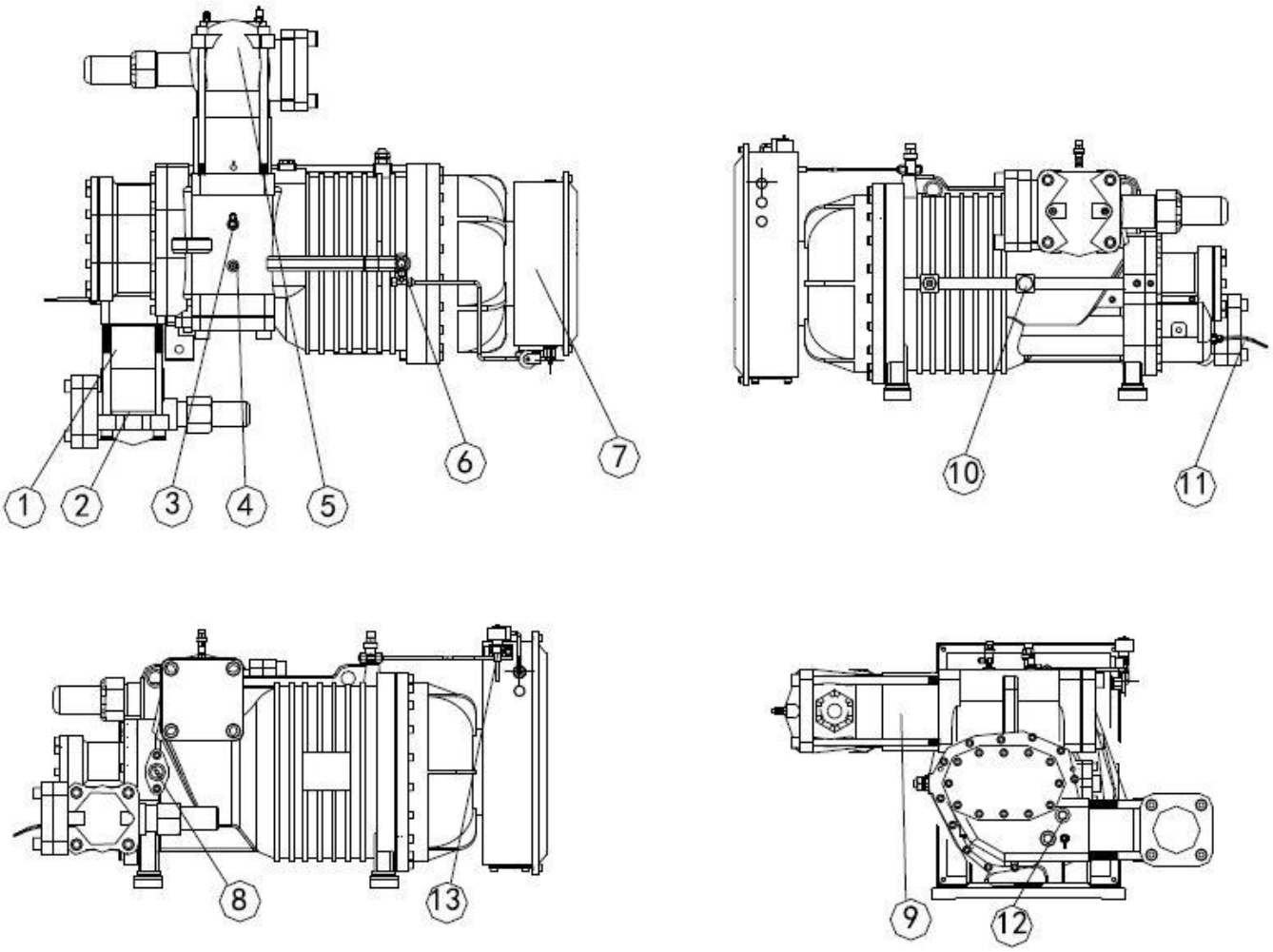

No.	Parts	Remark	No.	Parts	Remark
1	Discharge check valve	LBII360: 2-1/2” LBII410: 3”	8	Economizer flange	1-1/8”
2	Discharge stop valve	LBII360: 2-1/2” LBII410: 3”	9	Suction check valve	4”
3	Filling valve	1/4”	10	Oil inlet connector	5/8”
4	Low pressure side angle valve	1/4”	11	Discharge temp sensor	PTC/110C
5	Suction stop valve	4”	12	Safety valve plug	1/2”
6	Motor liquid injection port		13	Electronic expansion valve	
7	Terminal box				